ALUTECH
DOOR SYSTEMS

INSTALLATION MANUAL

Sectional Industrial Door

Vertical mounting with top shaft positioning

English

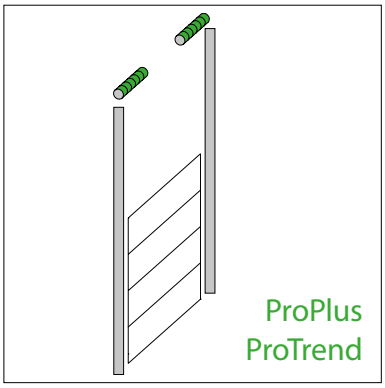

2016

www.alutech-group.com

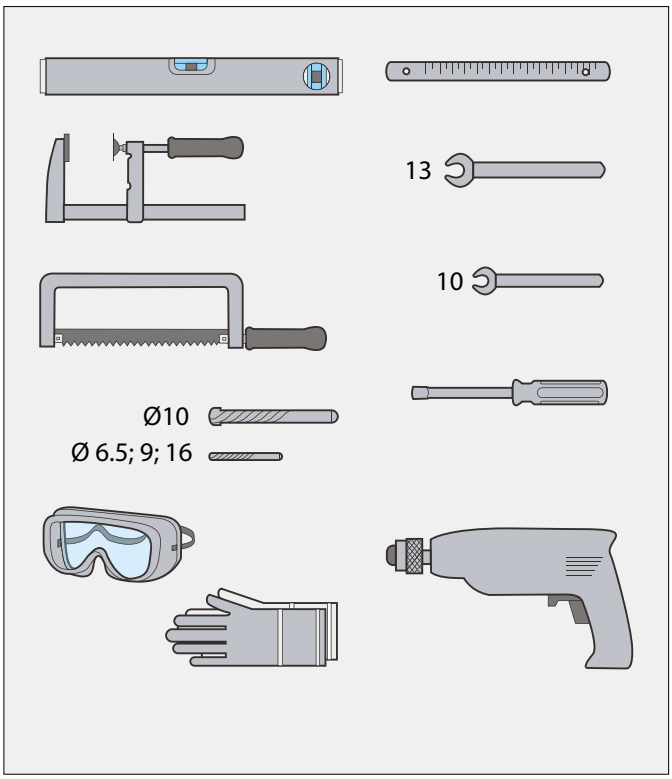
13
10
Ø10
Ø 6.5; 9; 16

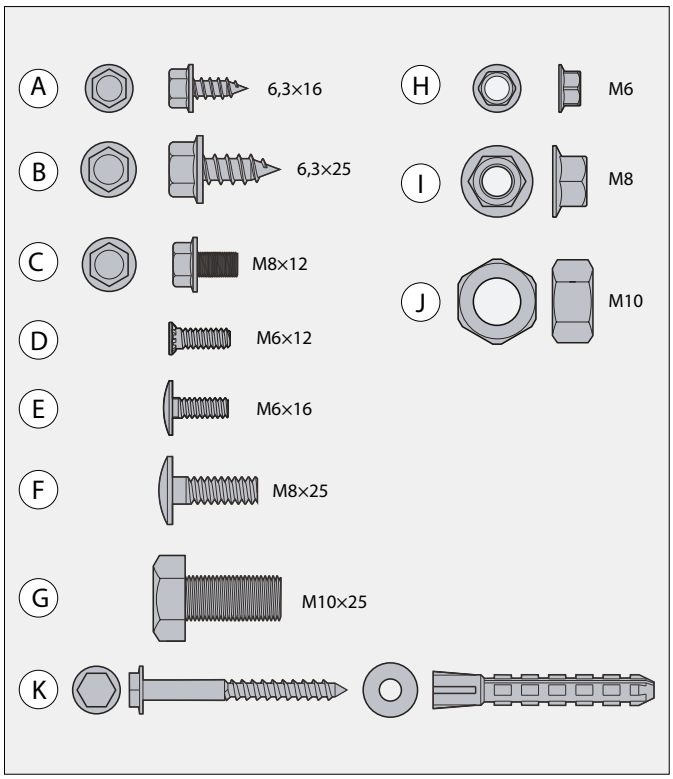
A
6,3×16
B
6,3×25
C
M8×12
D
M6×12
E
M6×16
F
M8×25
G
M10×25
K
H
M6
I
M8
J
M10

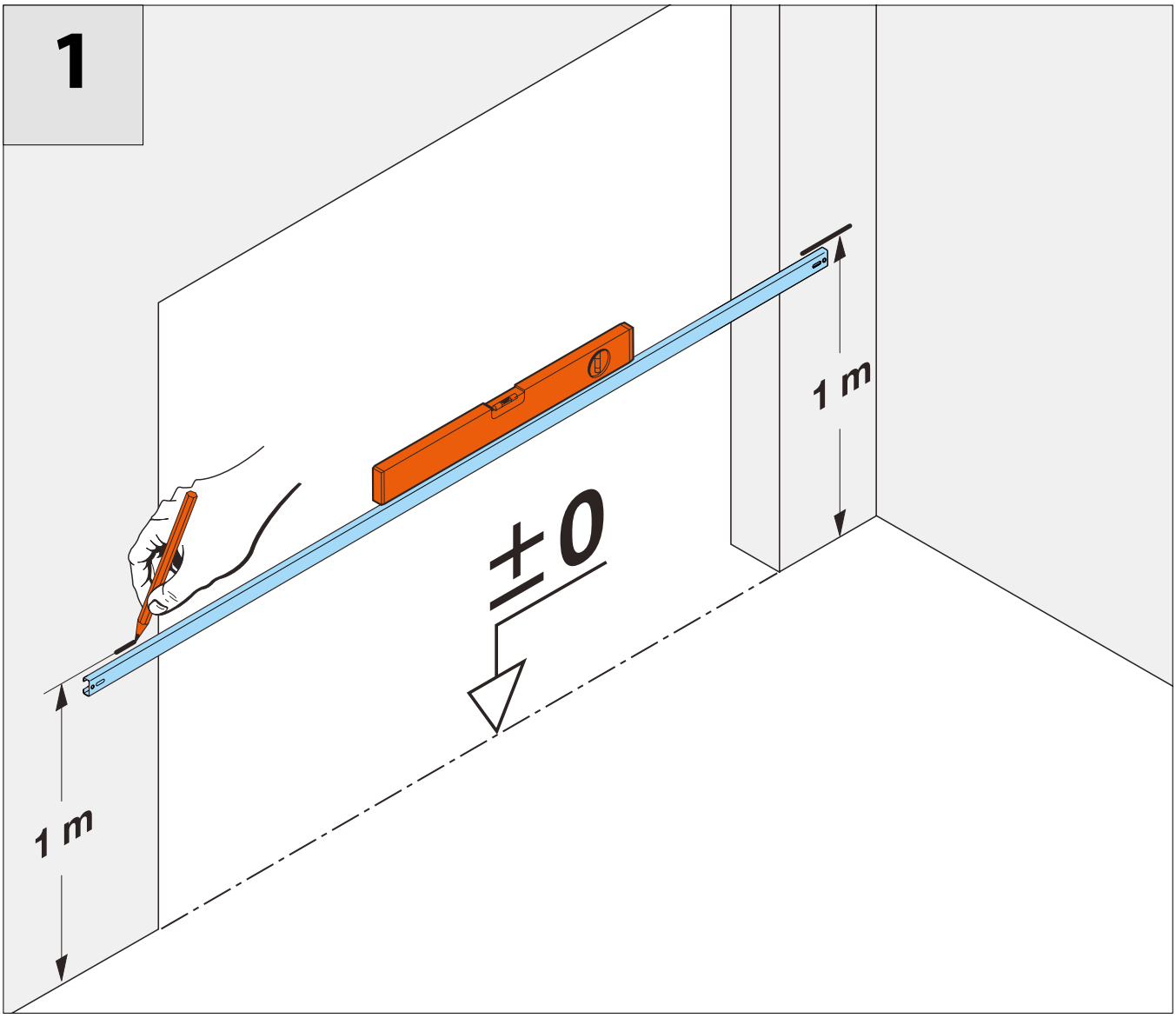
1
1 m
±0
1 m

2

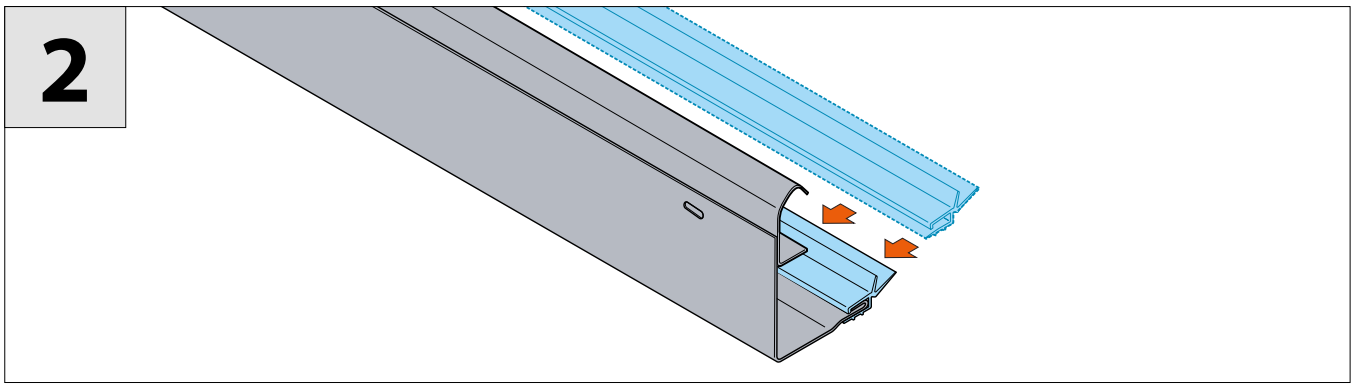

3a

3b

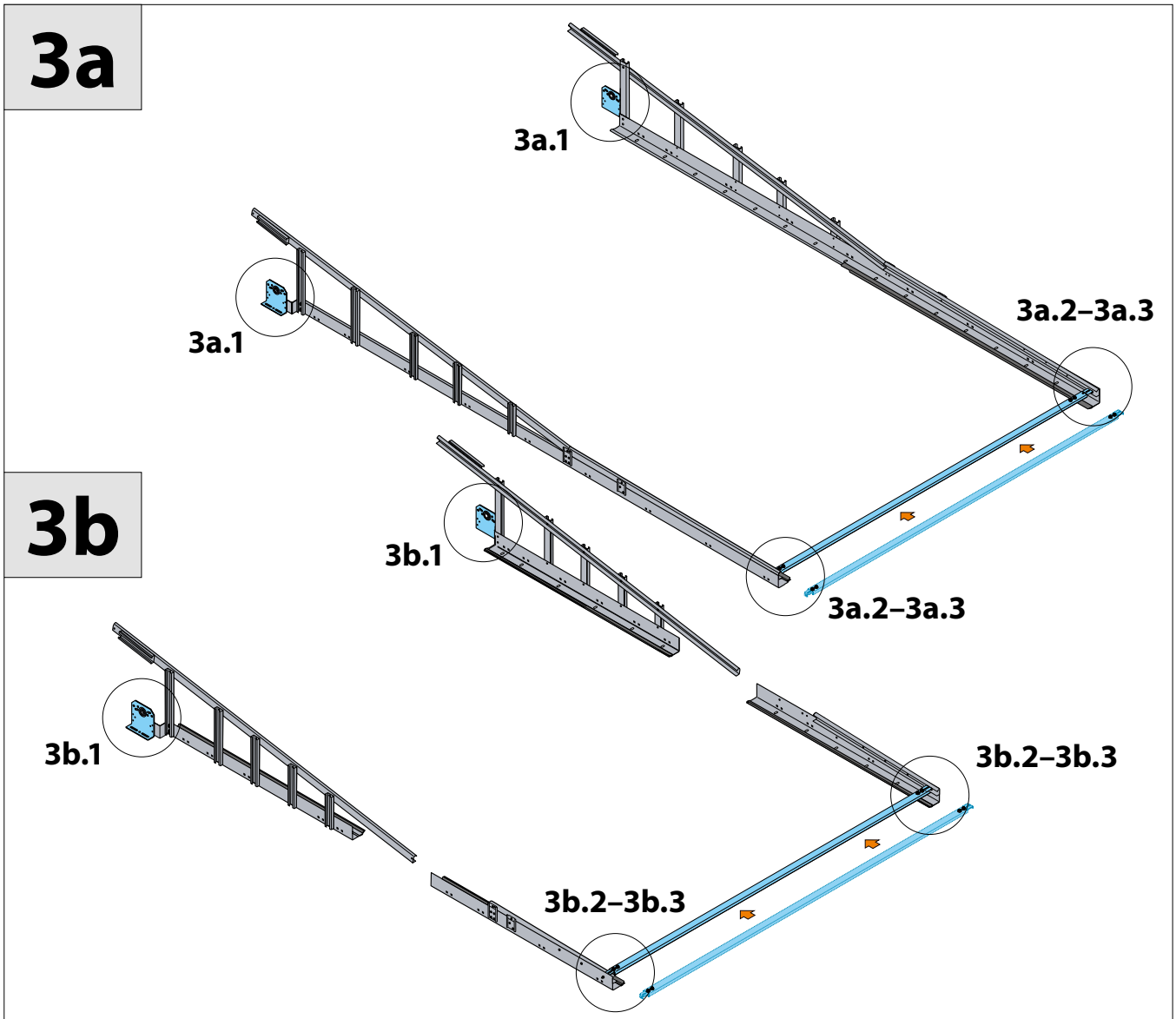

3a.1/3b.1

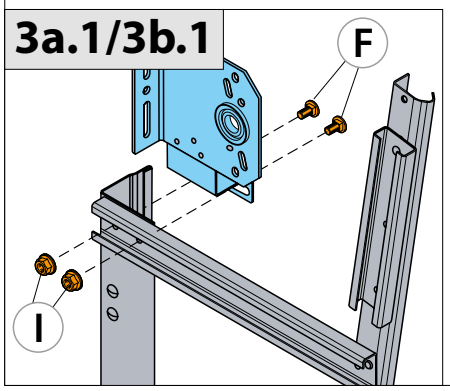

3a.2/3b.2

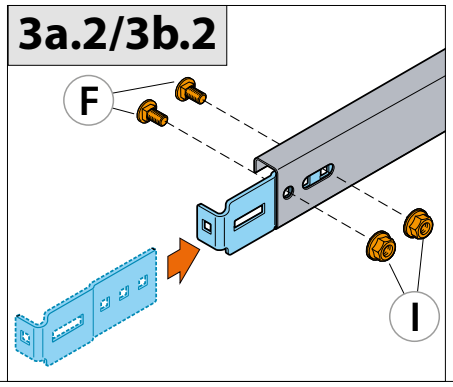

3a.3/3b.3

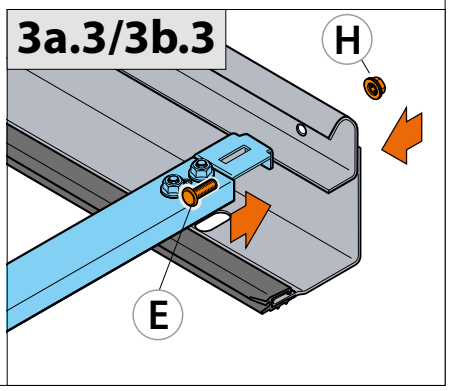

4a

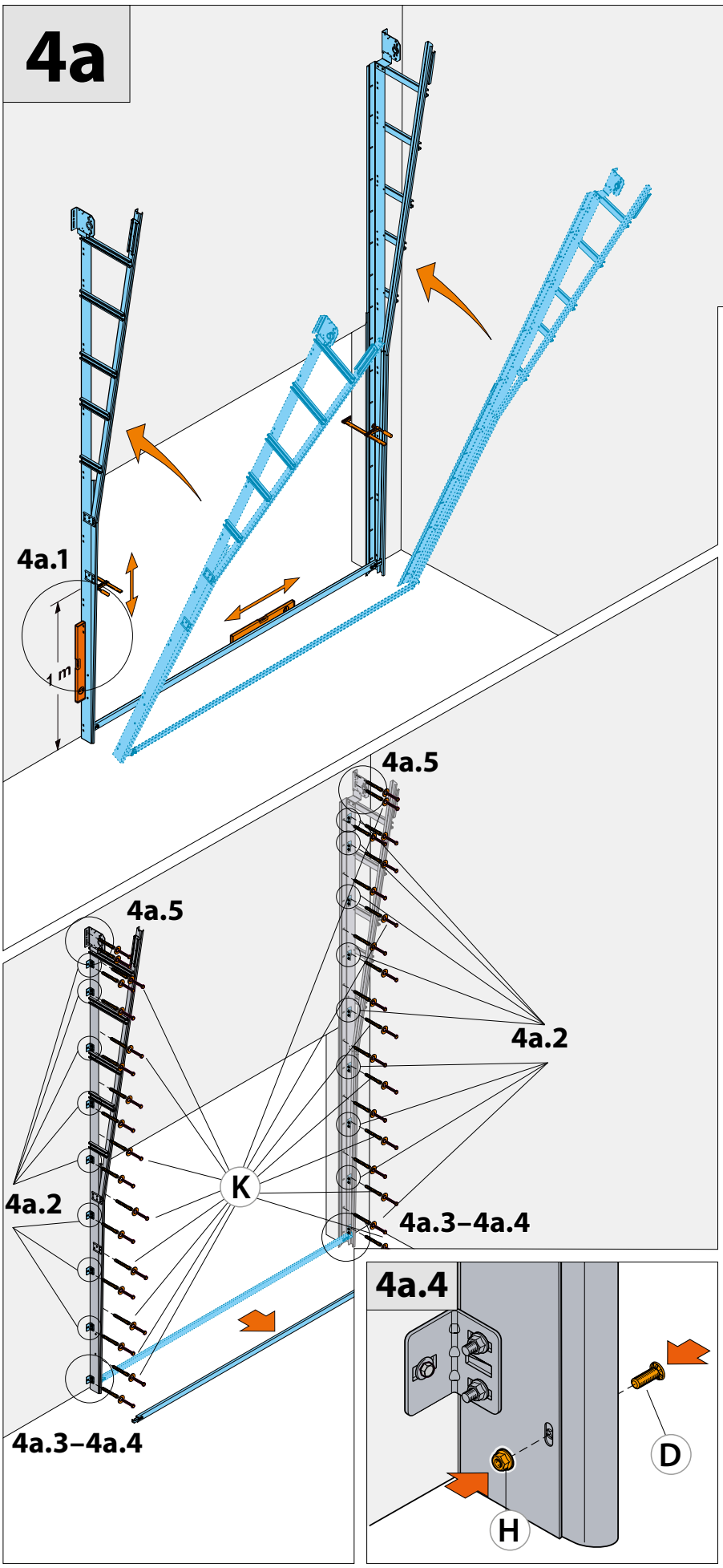
4a.1
1 m
4a.5
4a.5
4a.2
4a.2
K
4a.3–4a.4
4a.3–4a.4

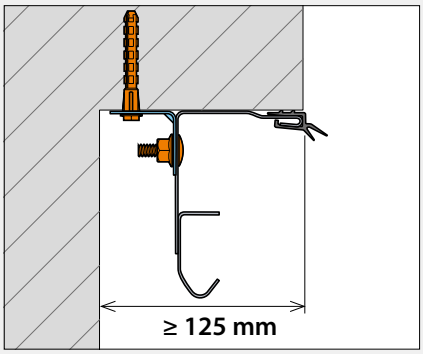
≥ 125 mm

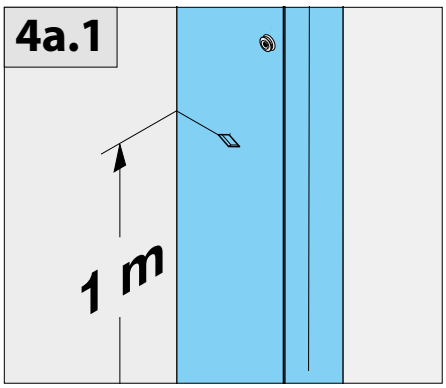
4a.1
1 m

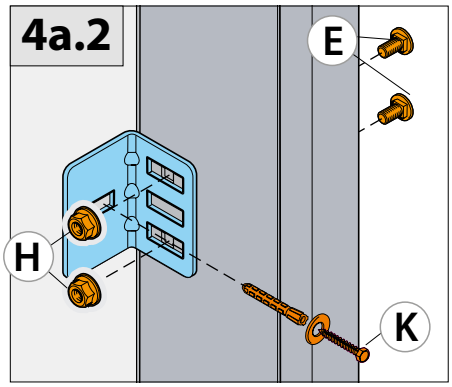
4a.2
E
H
K

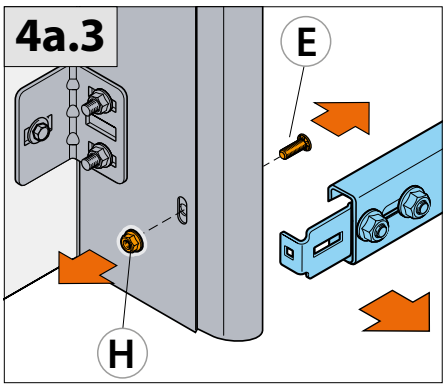
4a.3
E
H

4a.4
D
H

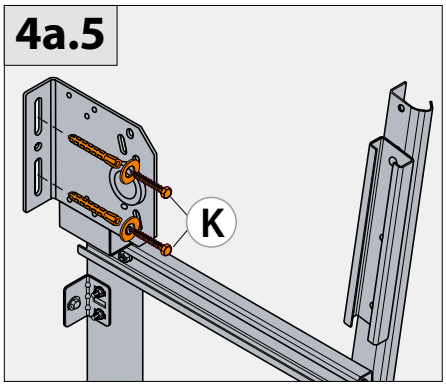
4a.5
K

4b

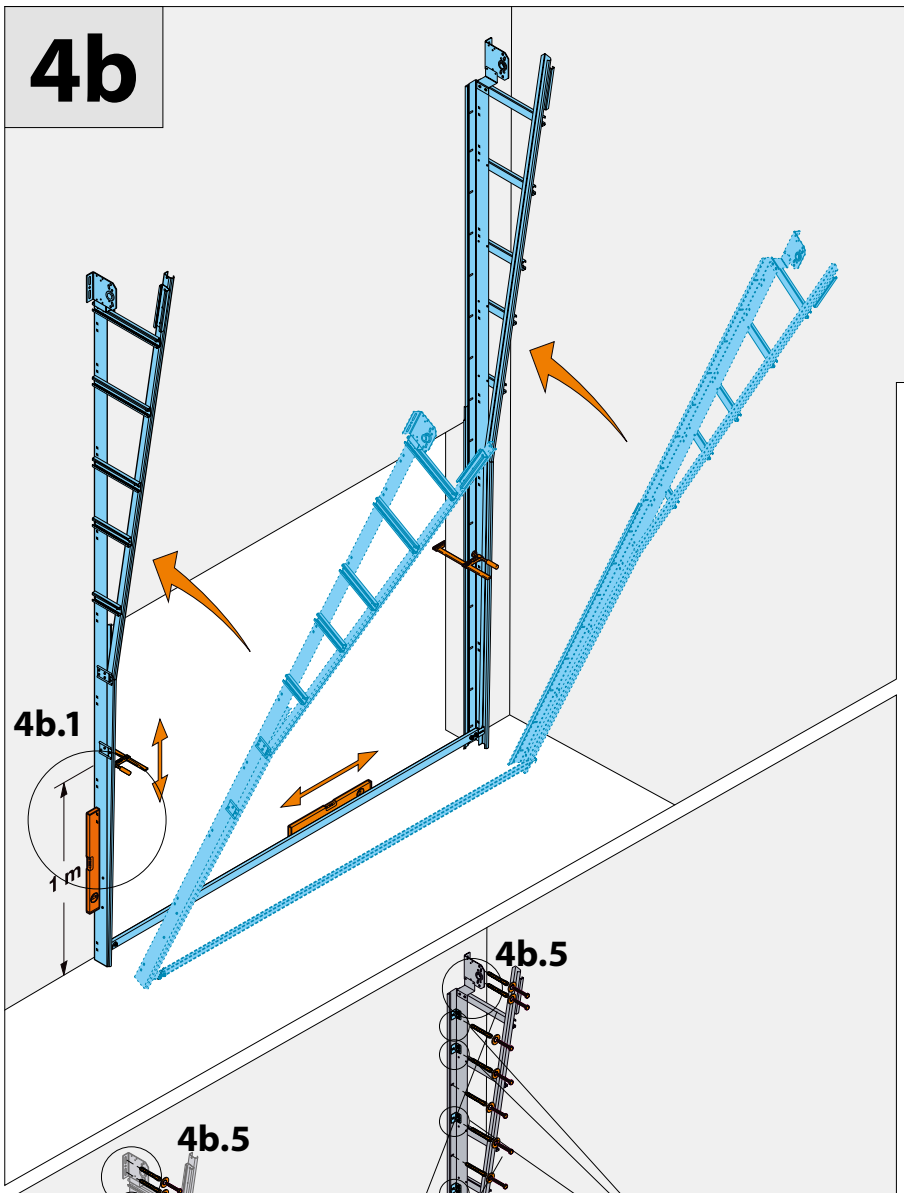
4b.1
1 m

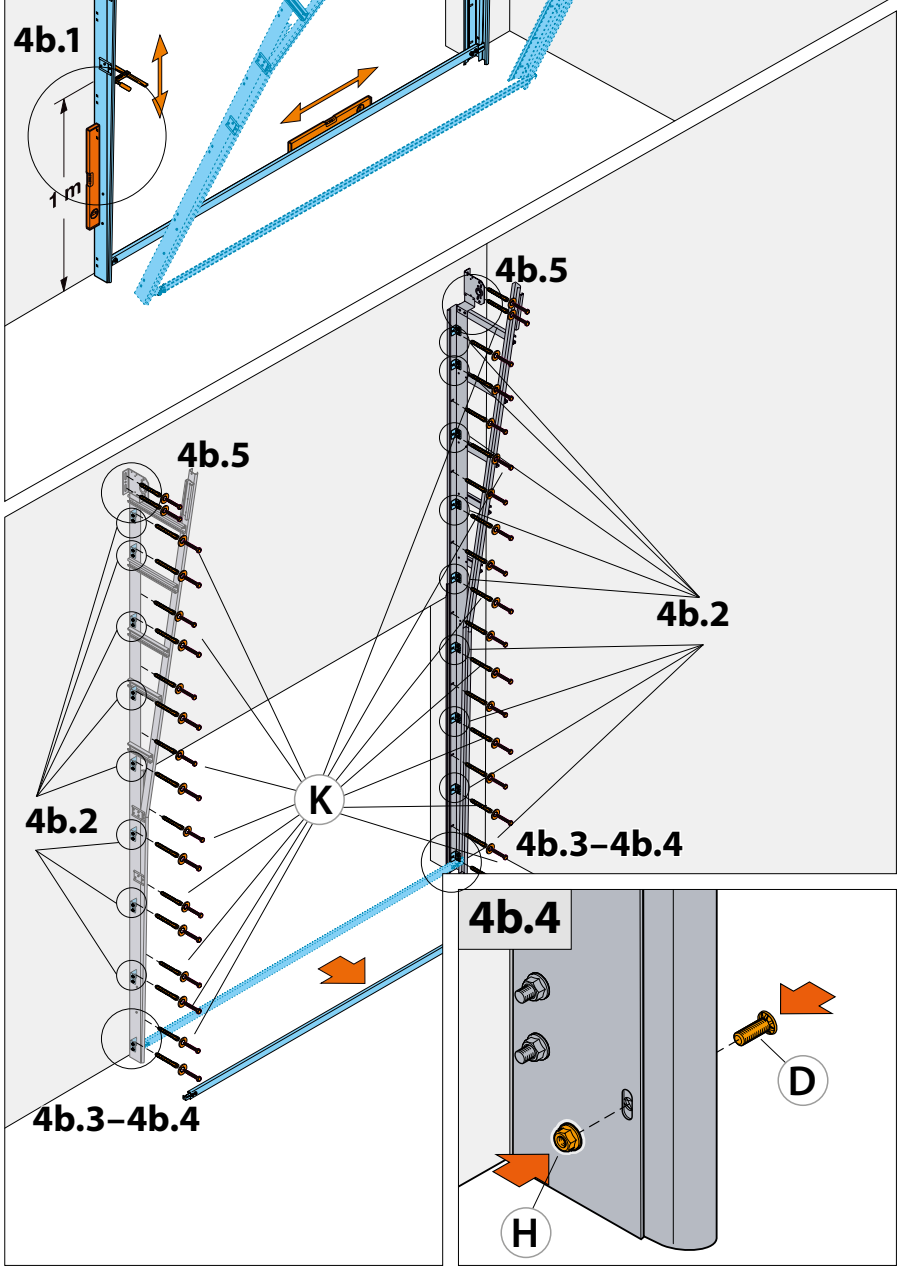
4b.5
4b.5
4b.2
4b.2
K
4b.3–4b.4
4b.3–4b.4

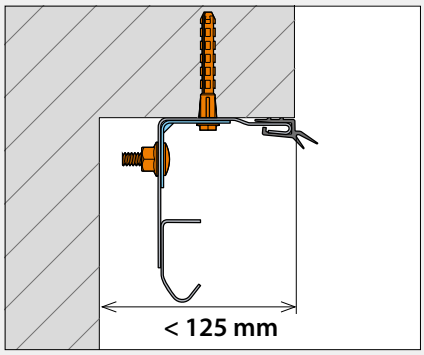
< 125 mm

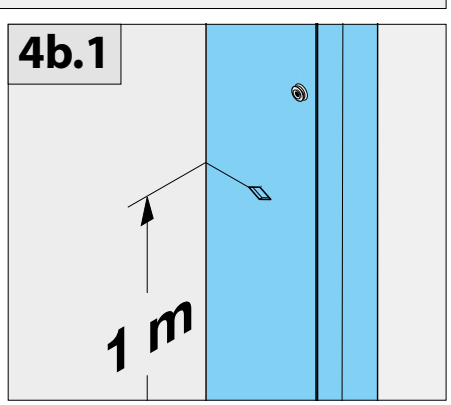
4b.1
1 m

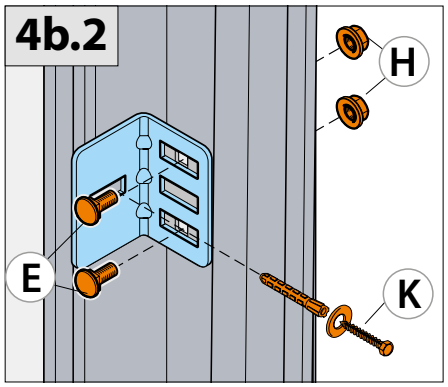
4b.2
H
E
K

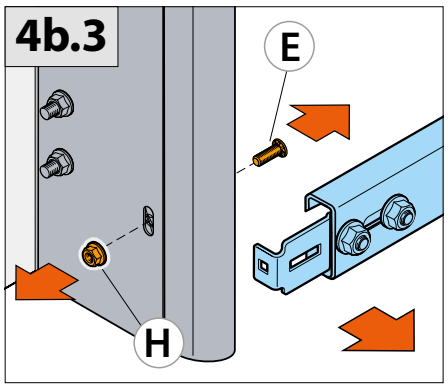
4b.3
E
H

4b.4
D
H

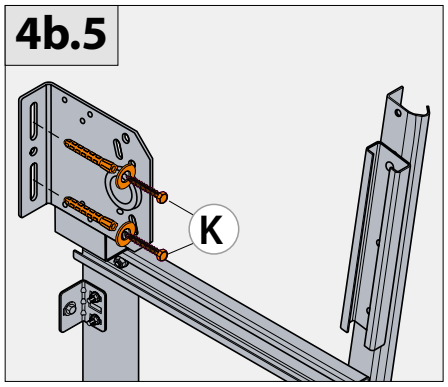
4b.5
K

4c

4c.1

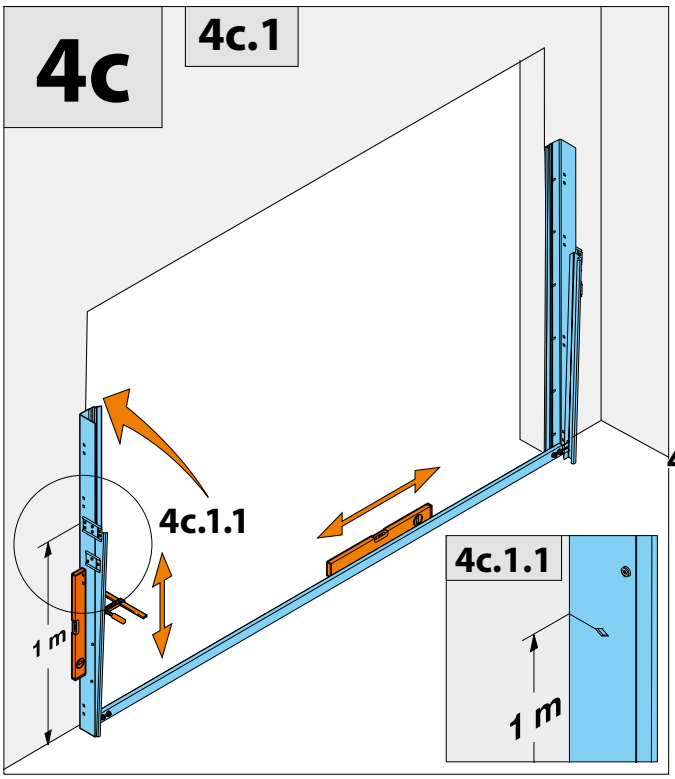

4c.1

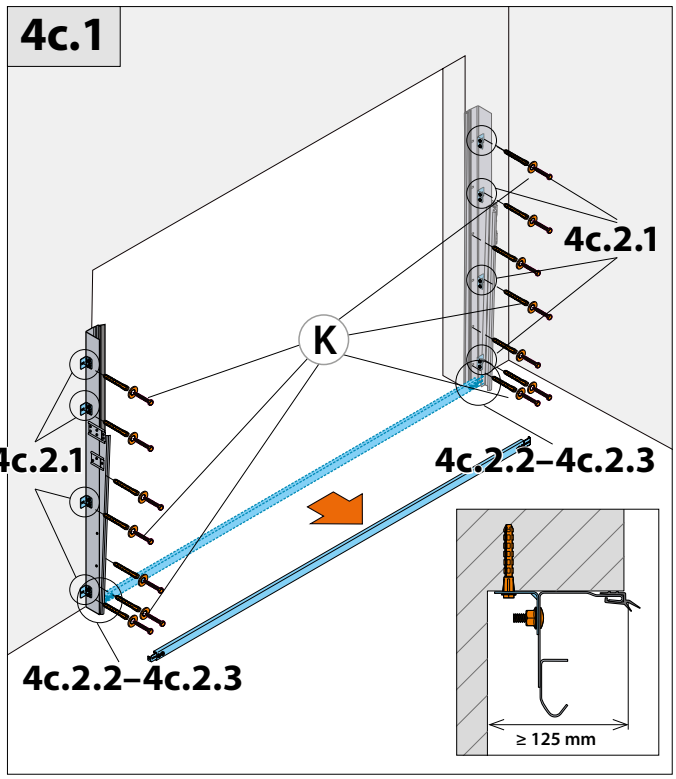

4c.3

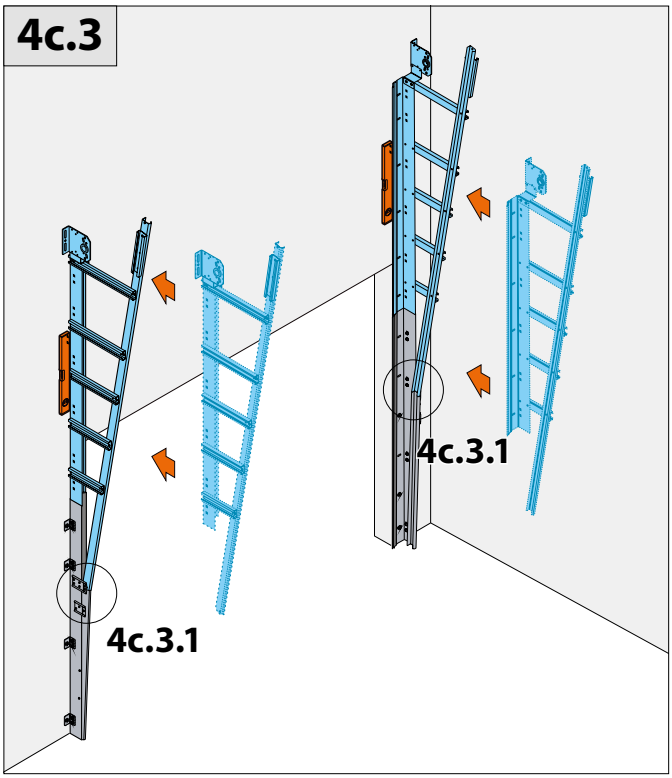

4c.4

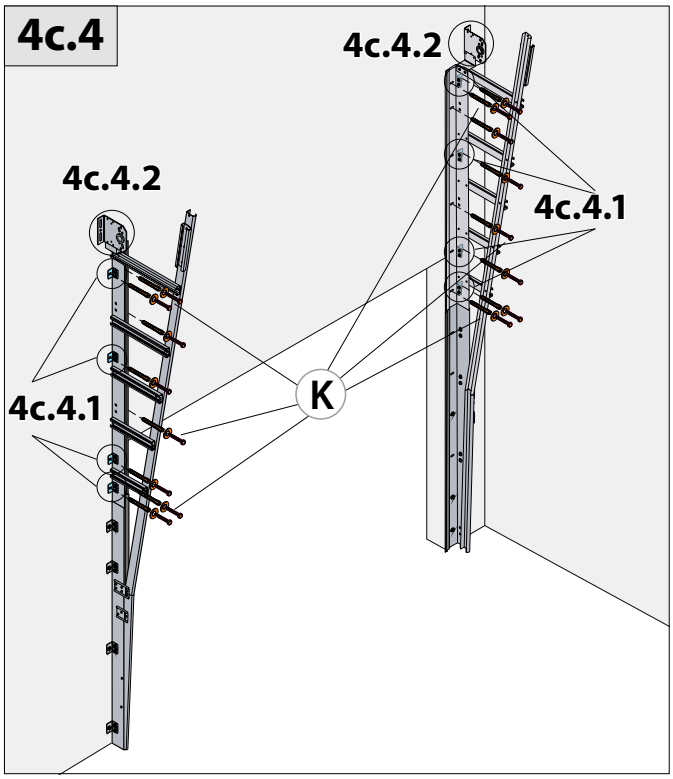

4c.2.1 / 4c.4.1

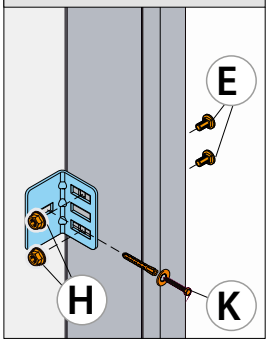

4c.2.2

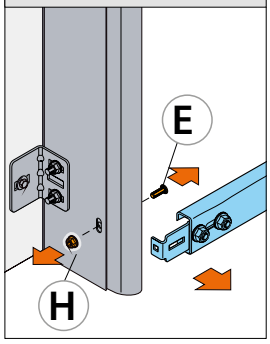

4c.2.3

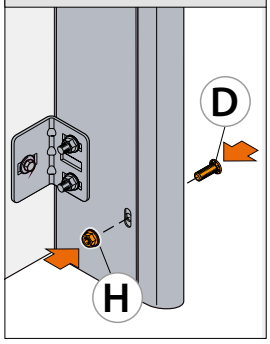

4c.3.1

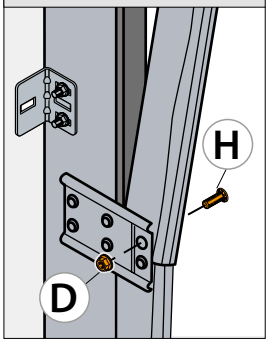

4c.4.2

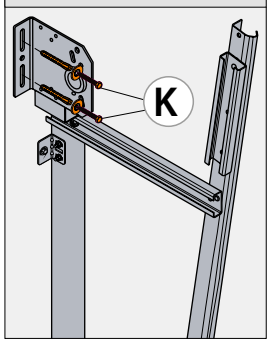

4d

4d.1

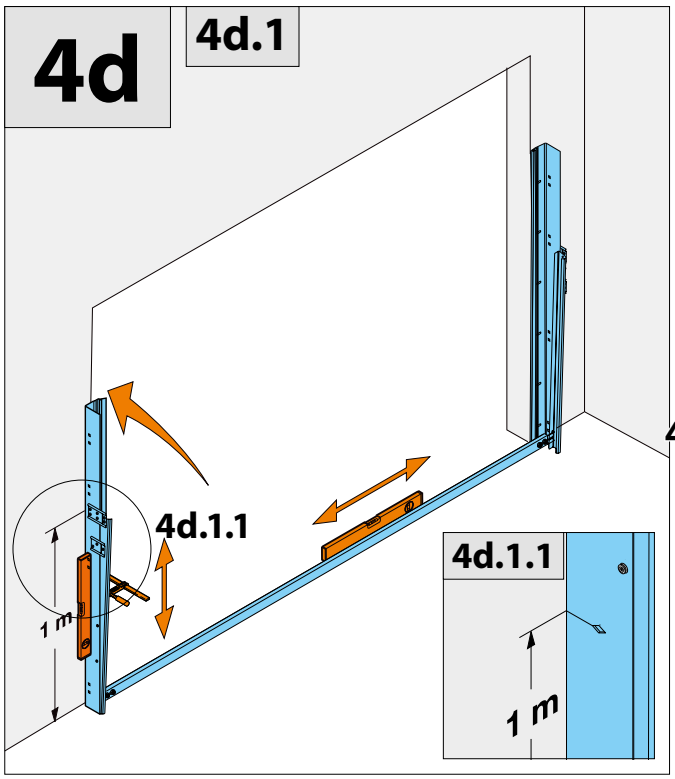

4d.2

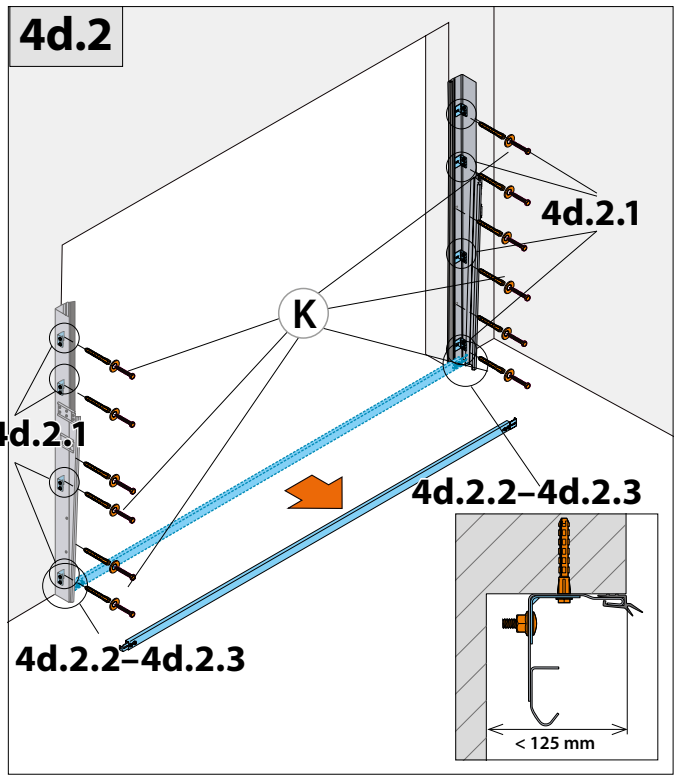

4d.3

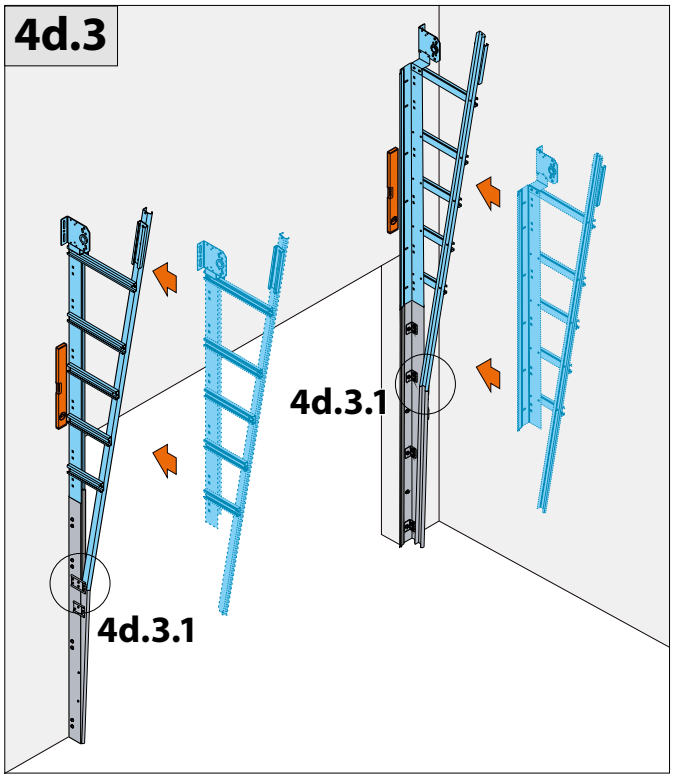

4d.4

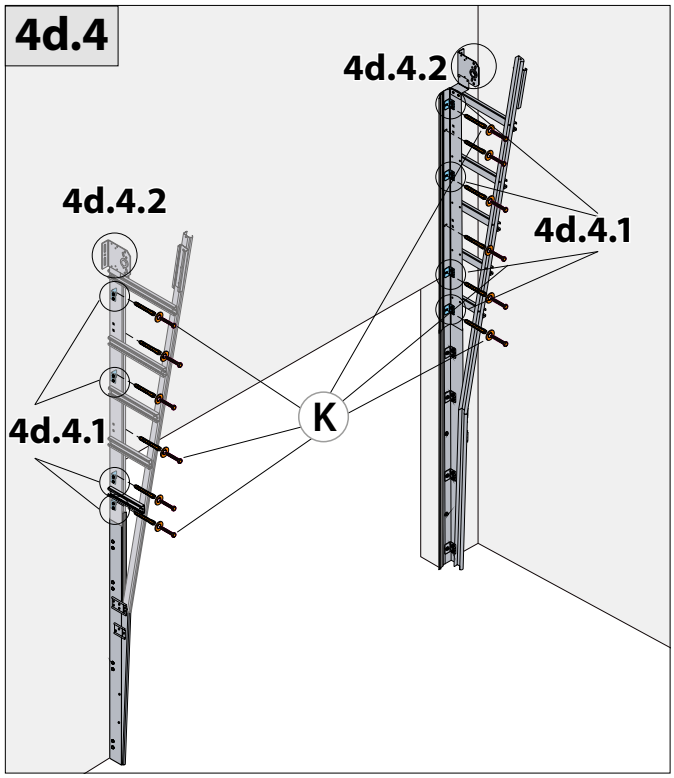

4d.2.1 / 4d.4.1

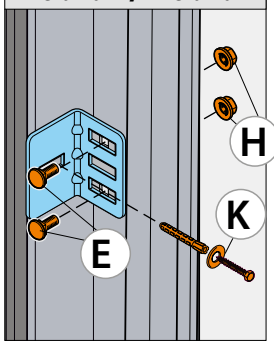

4d.2.2

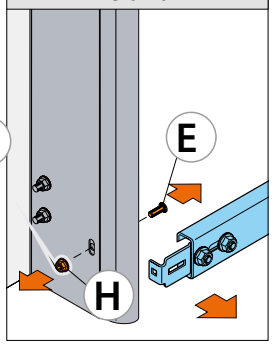

4d.2.3

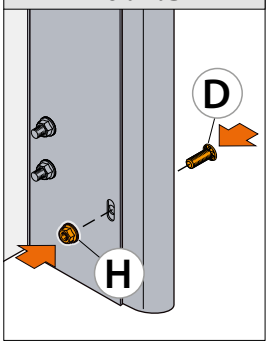

4d.3.1

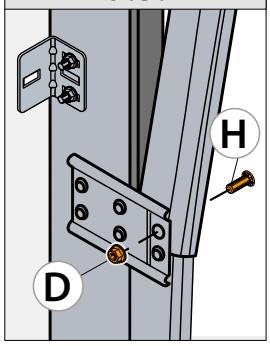

4d.4.2

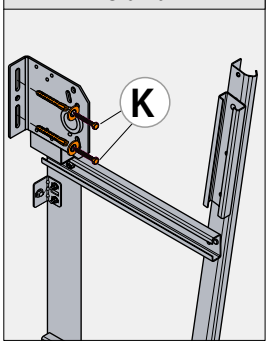

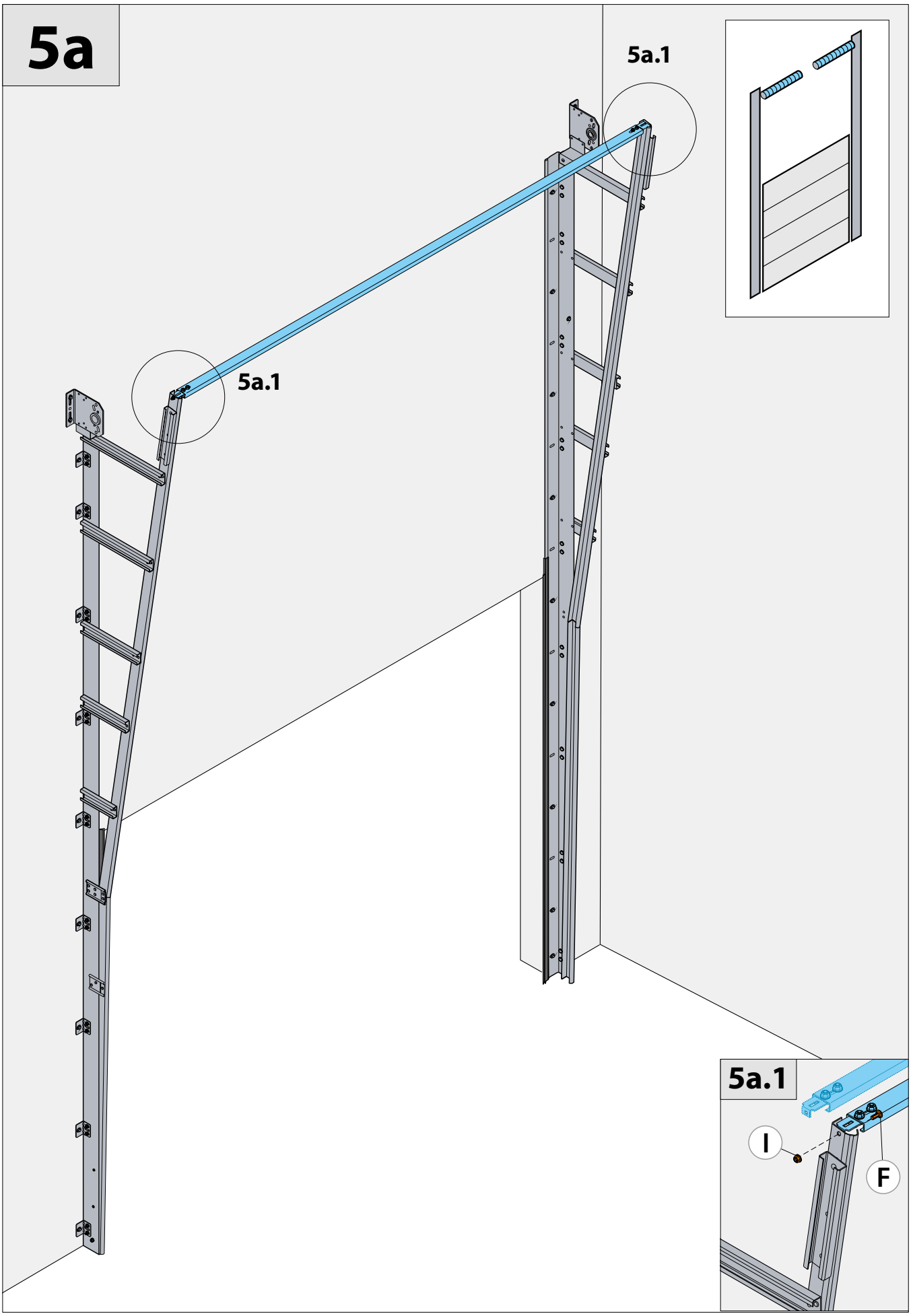
5a
5a.1
5a.1
5a.1
I
F

5b ProPlus

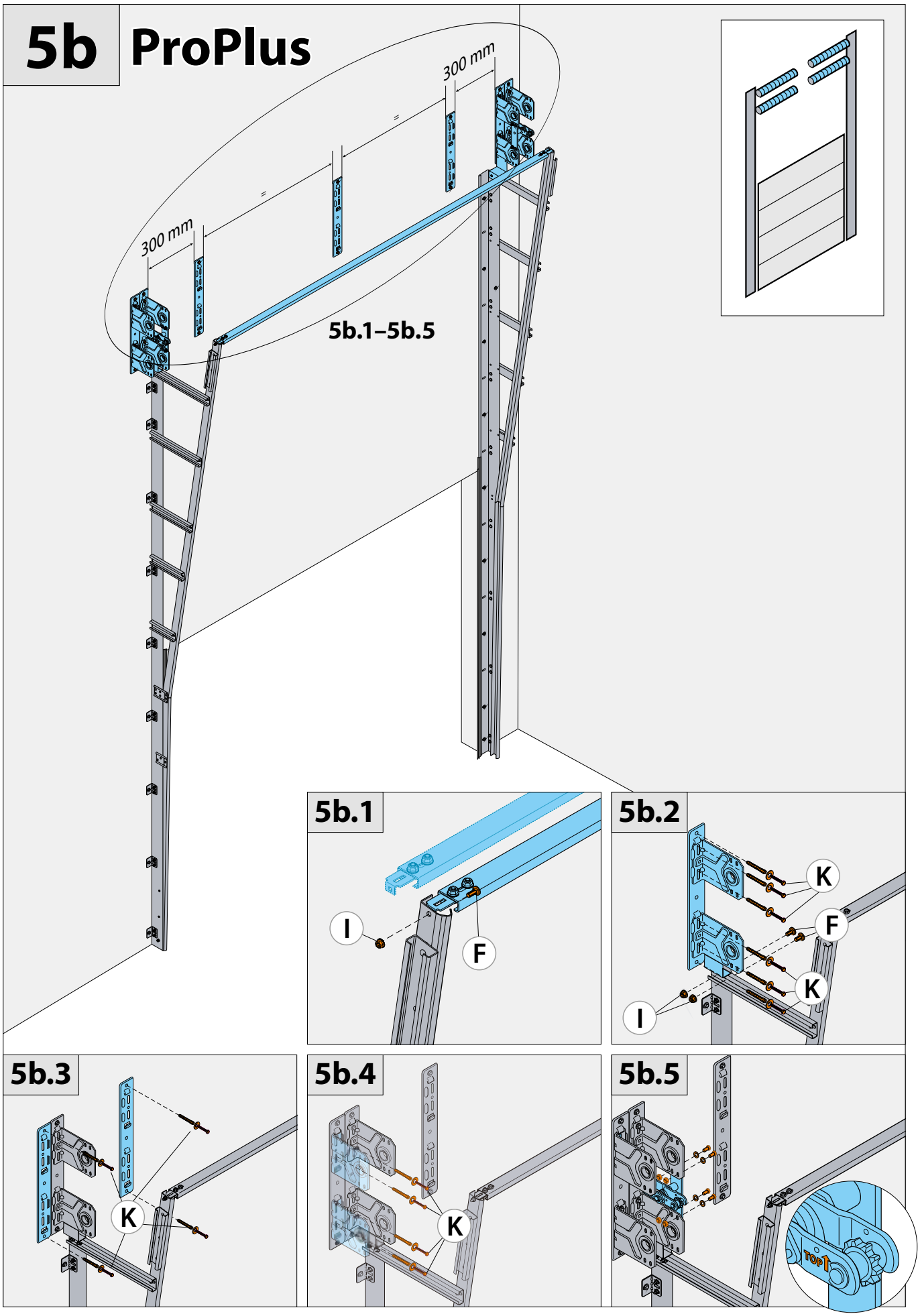

6a

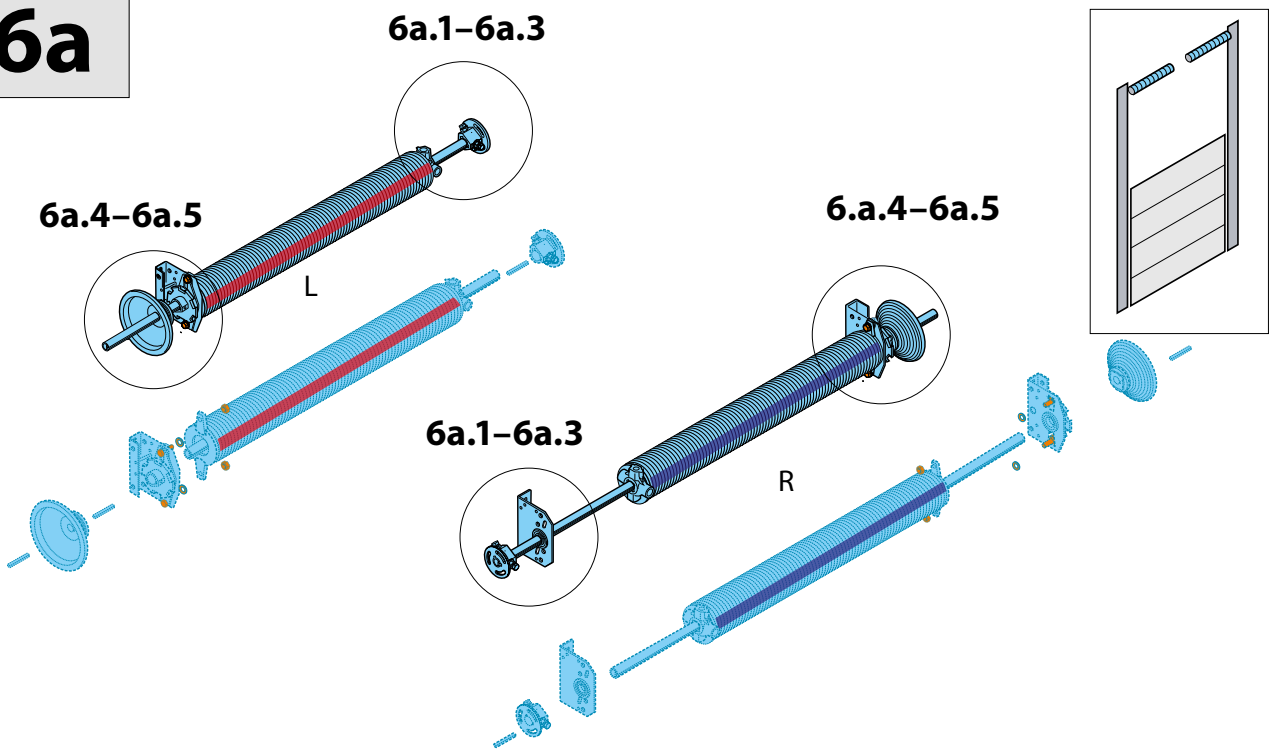

6a.1

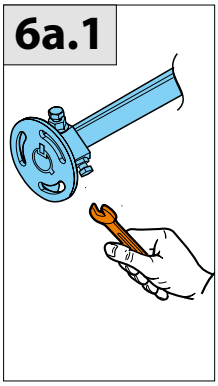

6a.2

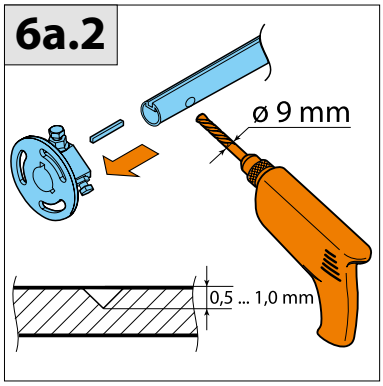

6a.3

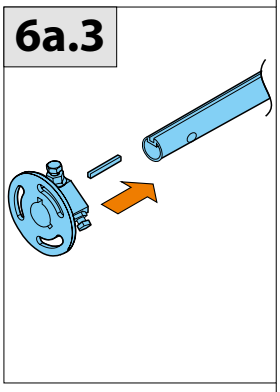

6a.4a

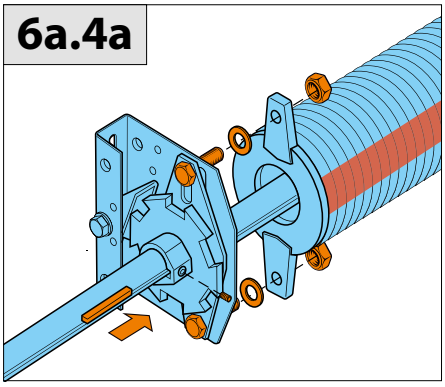

6a.5a

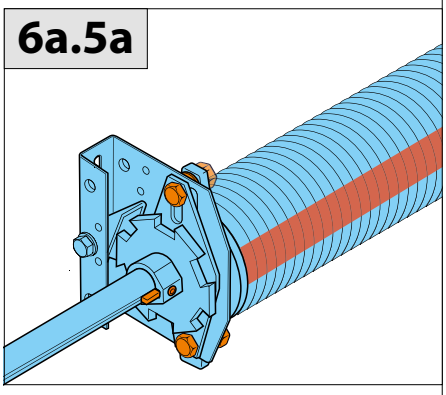

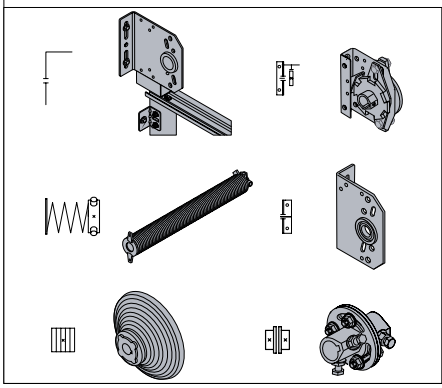

6a.4b

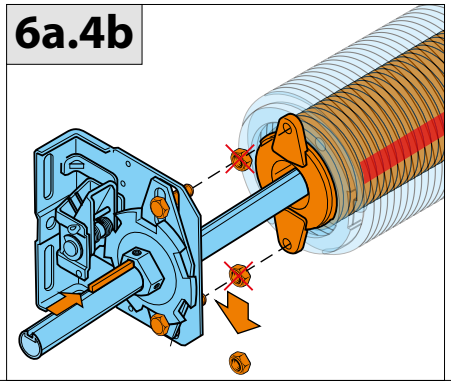

6a.5b

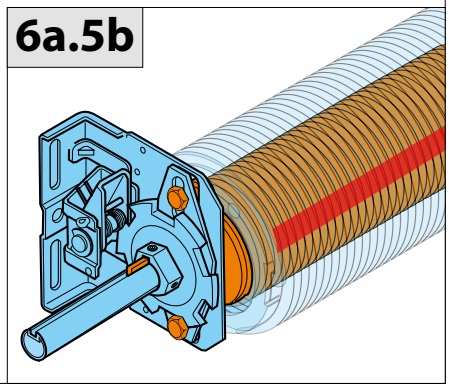

6b ProPlus

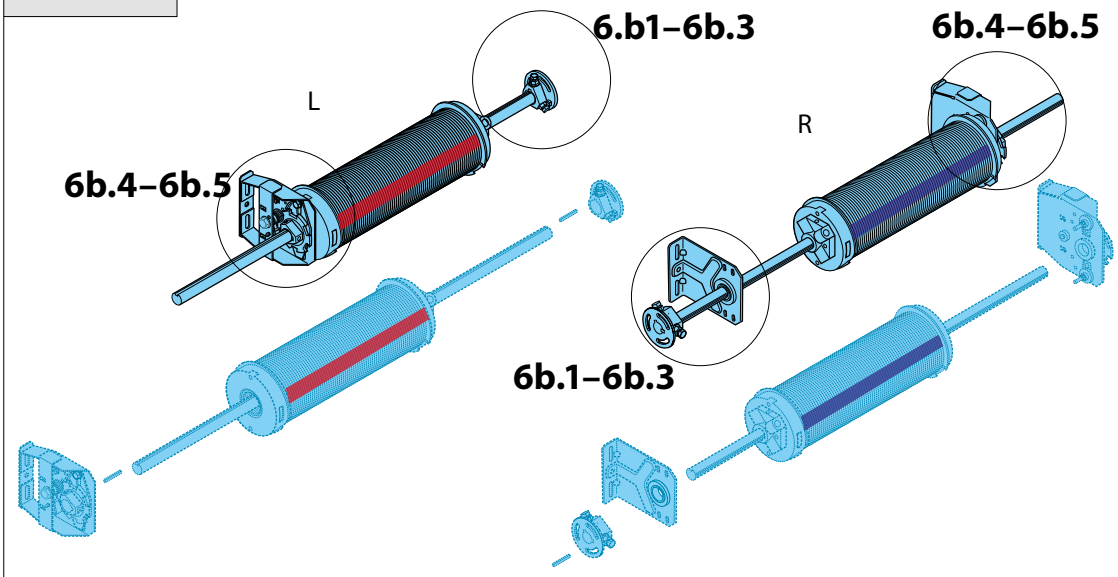

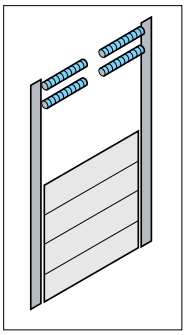

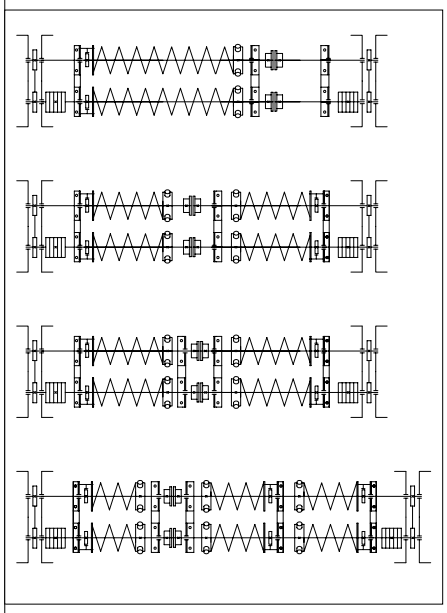

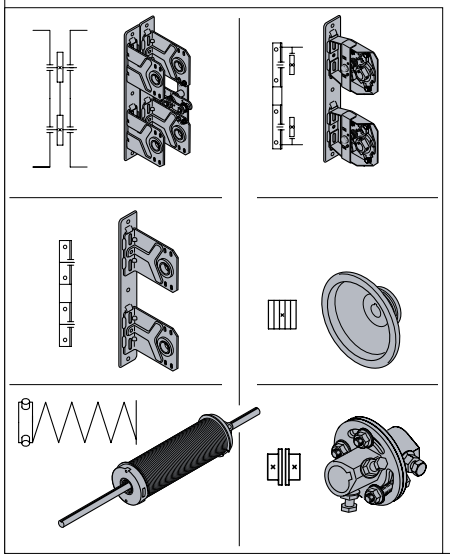

6a.1

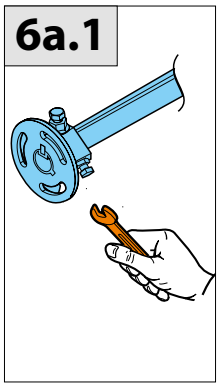

6a.2

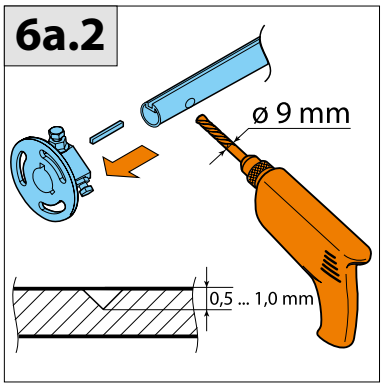

6a.3

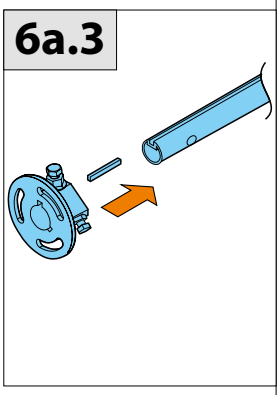

6b.4a

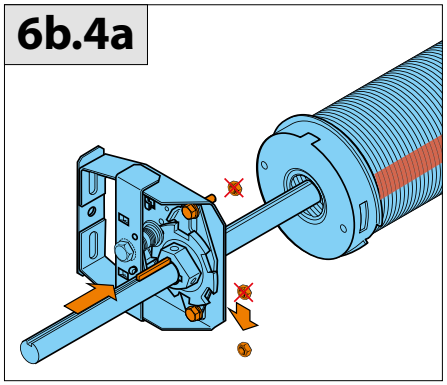

6b.5a

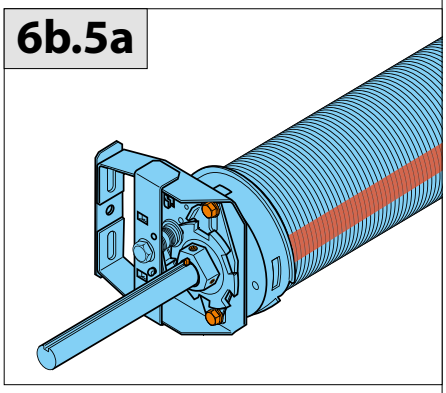

6b.4b

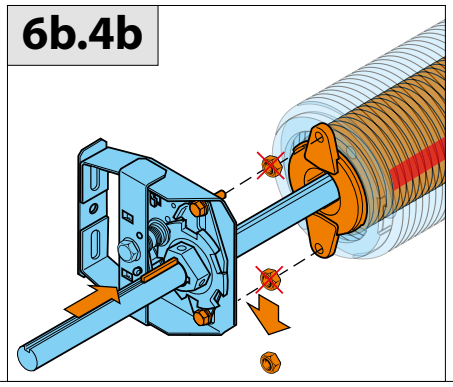

6b.5b

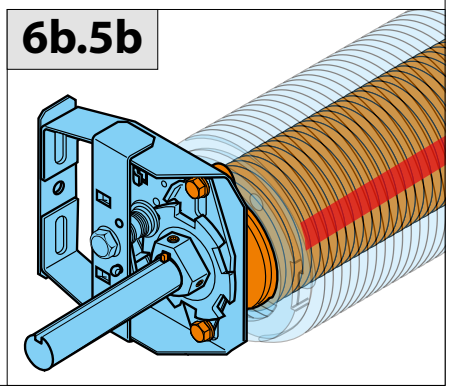

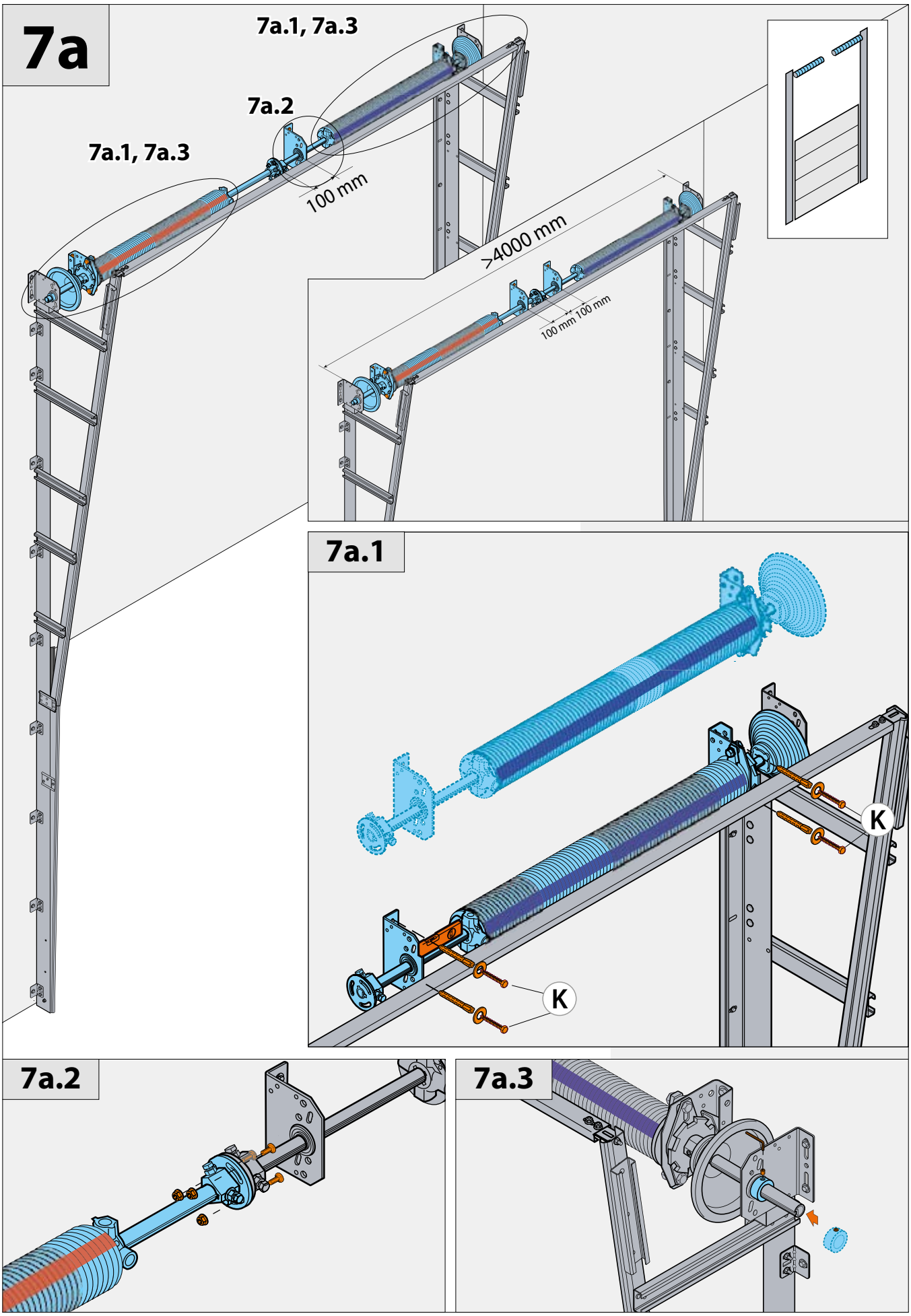
7a
7a.1, 7a.3
7a.2
7a.1, 7a.3
100 mm
>4000 mm
100 mm 100 mm
7a.1
K
K
7a.2
7a.3

7b ProPlus

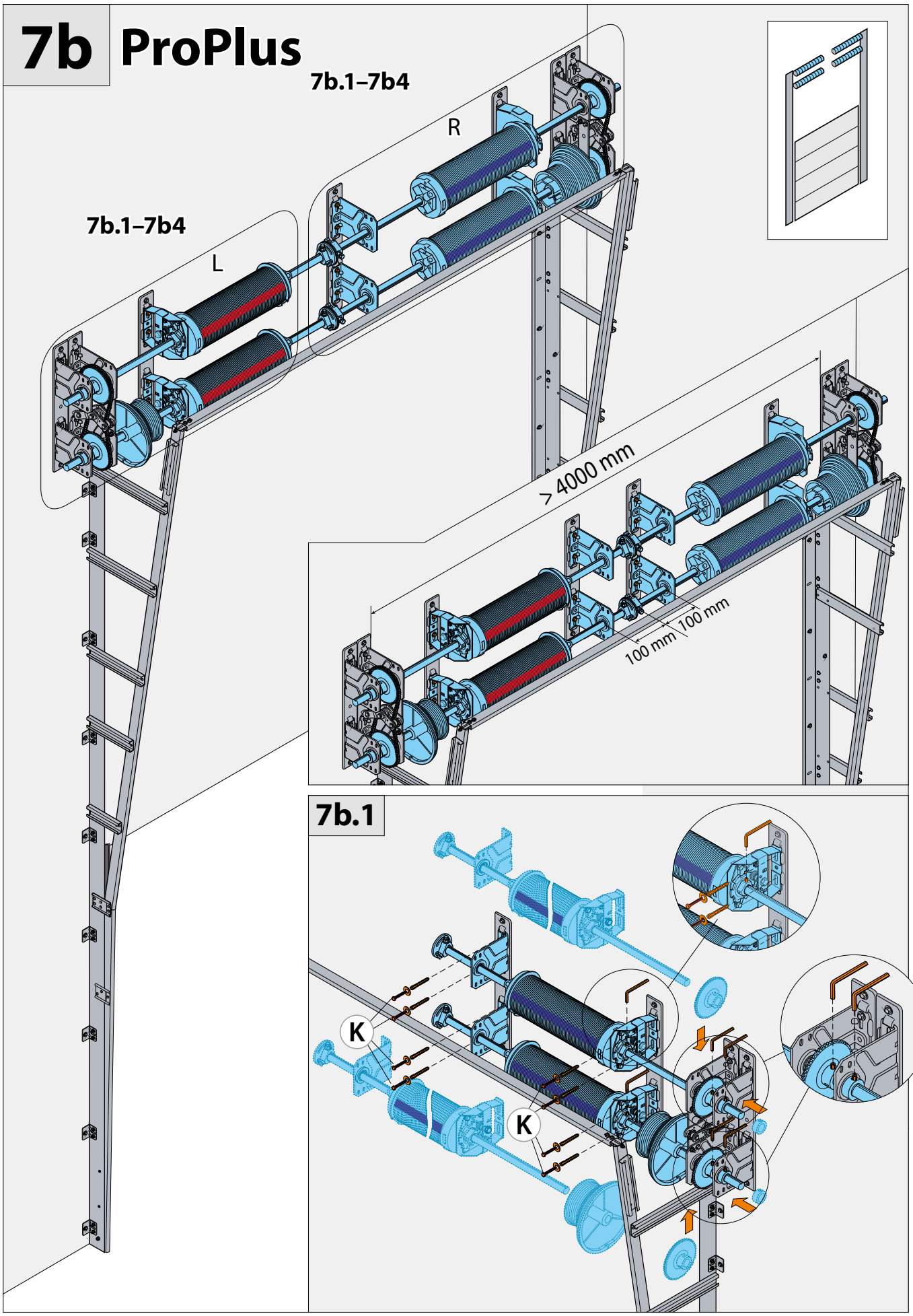

7b.2 ProPlus

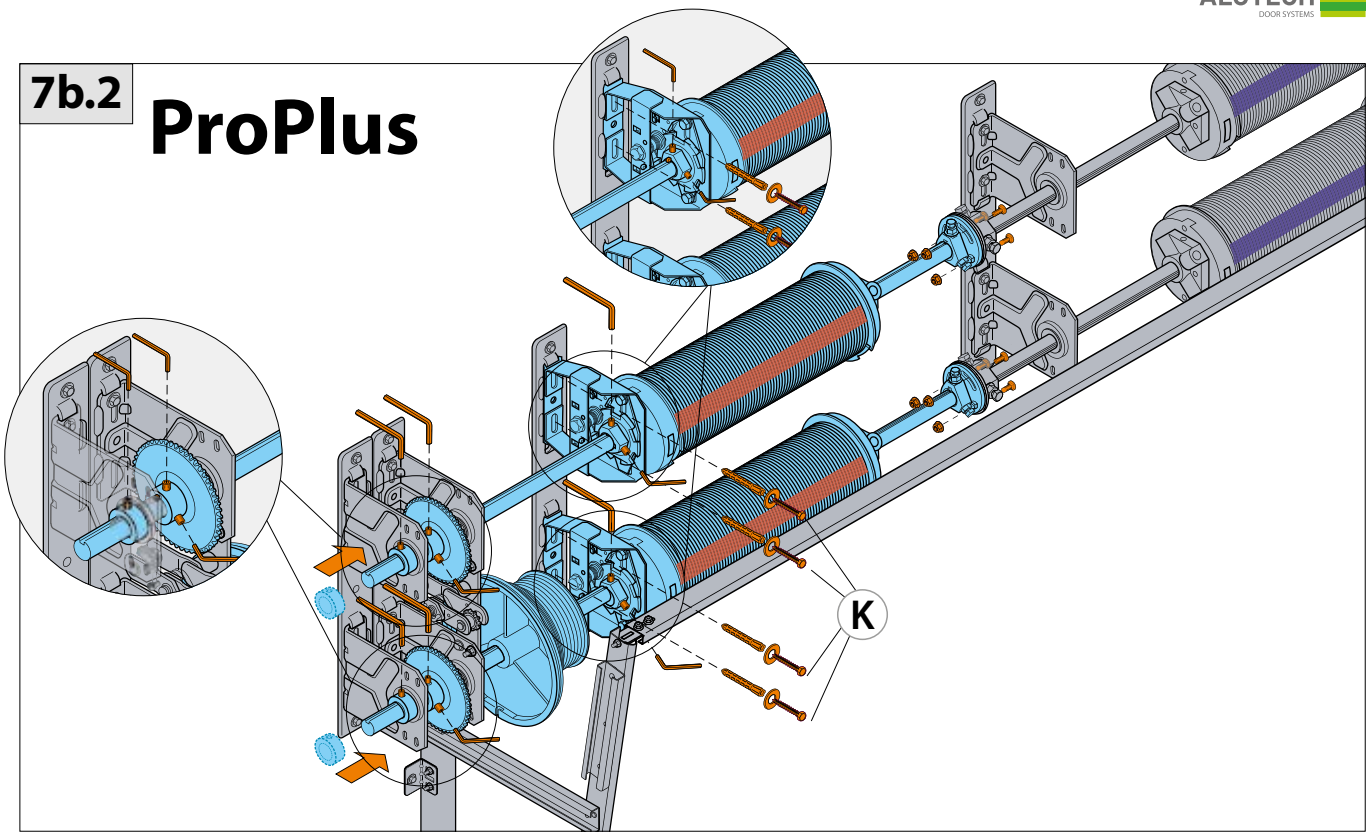

7b.3

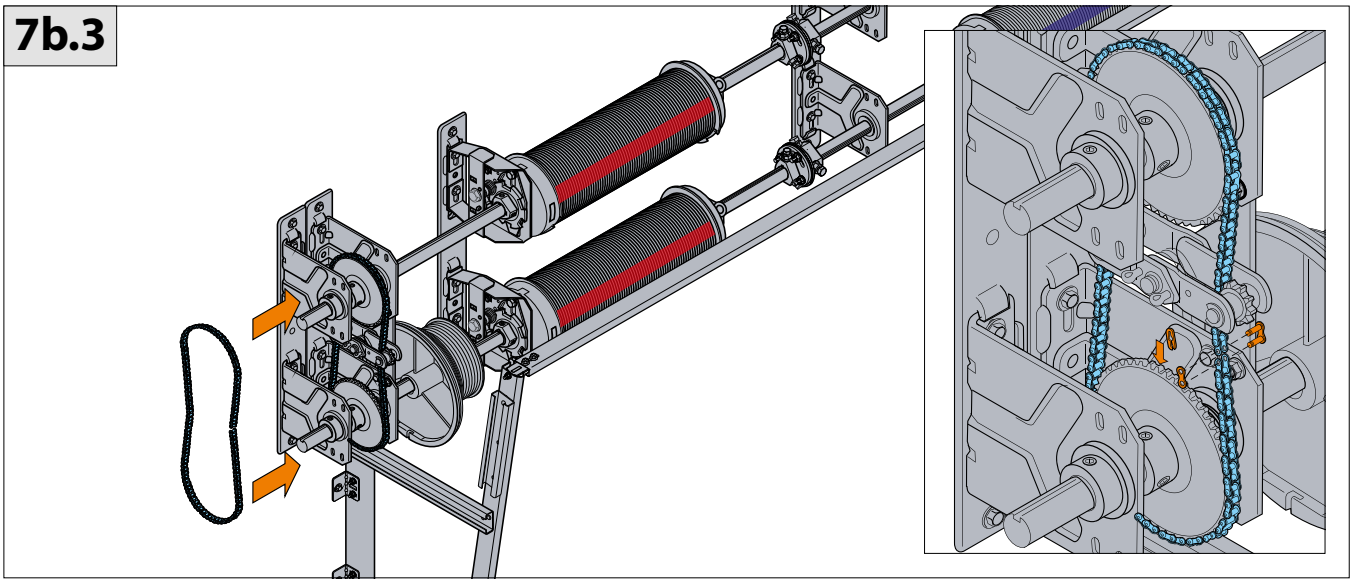

7b.4

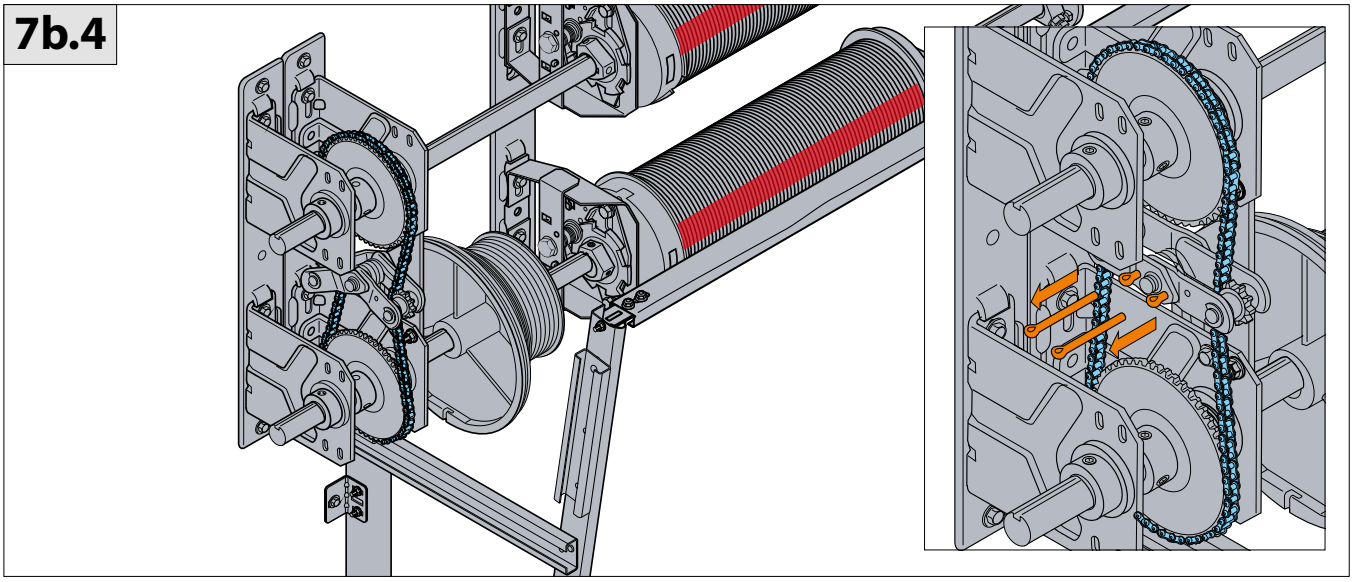

8a ProPlus

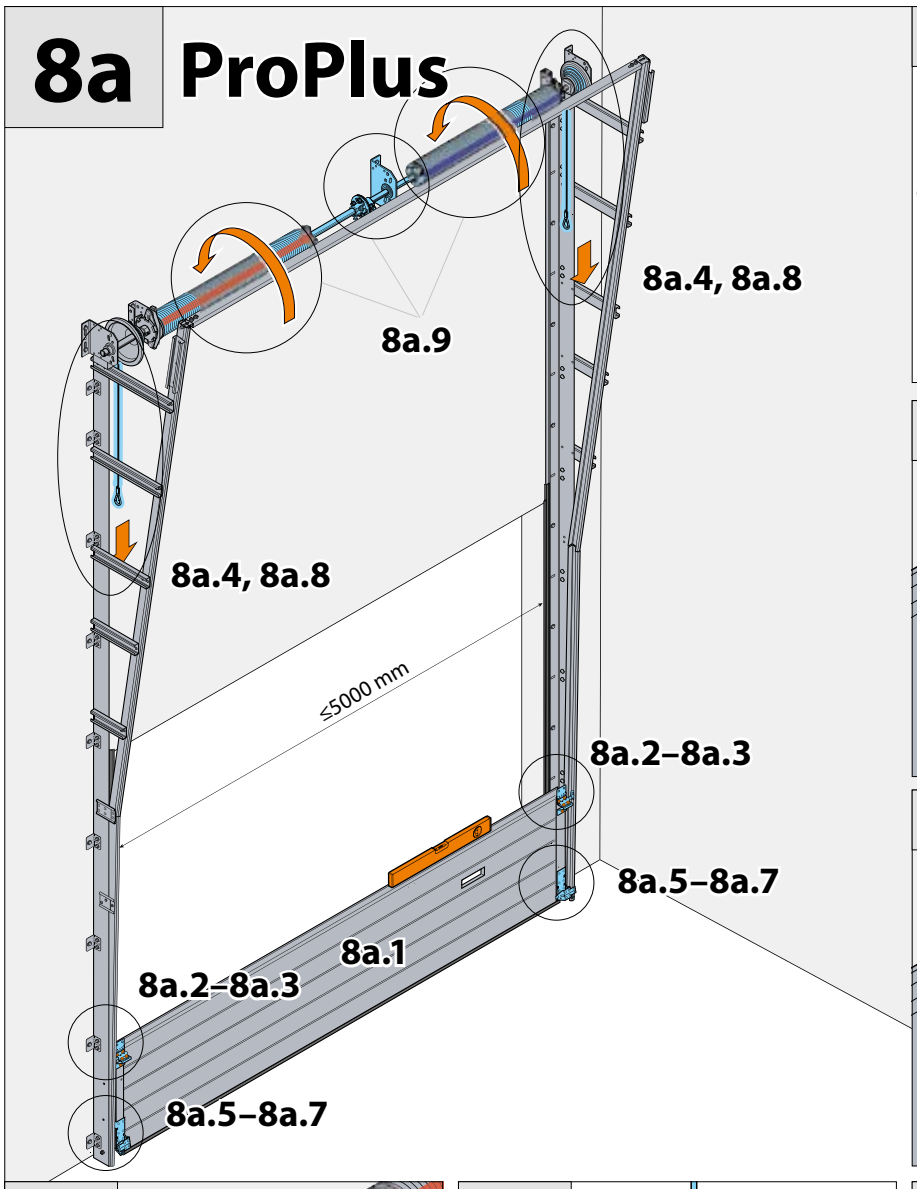
8a.4, 8a.8
8a.9
8a.4, 8a.8
≤5000 mm
8a.2–8a.3
8a.5–8a.7
8a.1
8a.2–8a.3
8a.5–8a.7

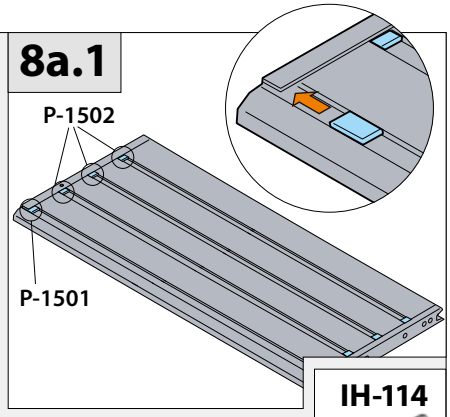
8a.1
P-1502
P-1501

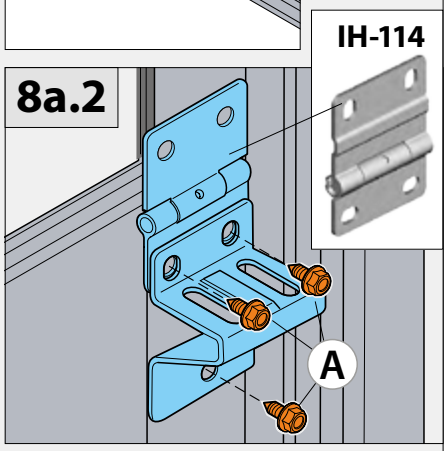
IH-114
8a.2
A

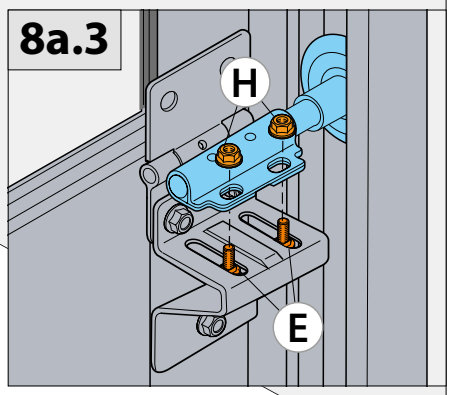
8a.3
H
E

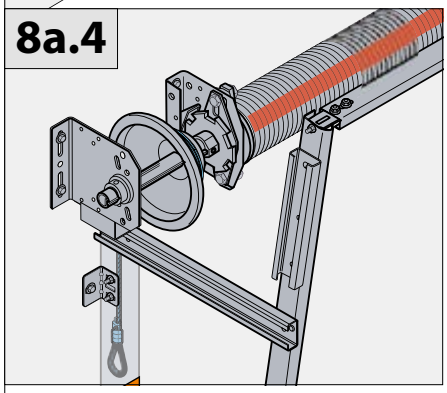
8a.4

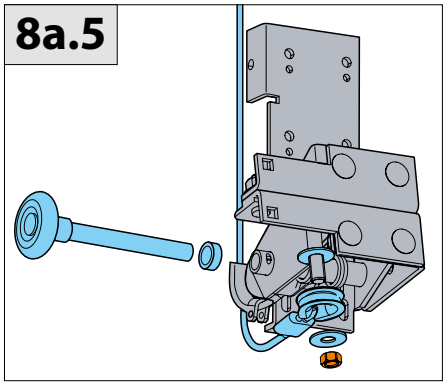
8a.5

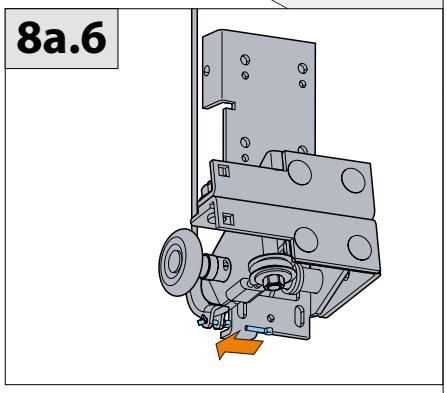
8a.6

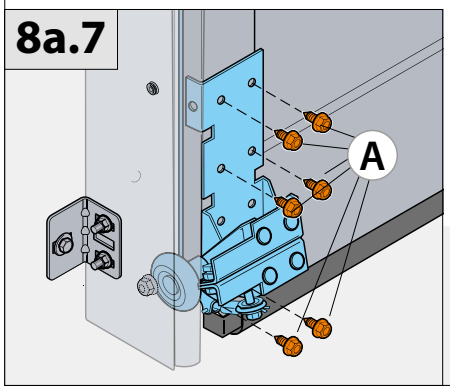
8a.7
A

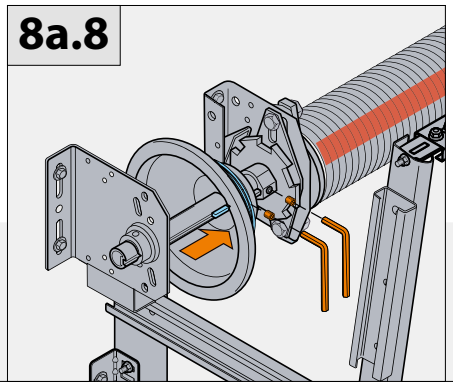
8a.8

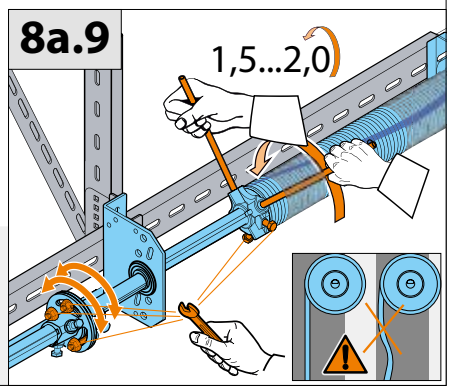
8a.9
1,5...2,0

8b ProTrend

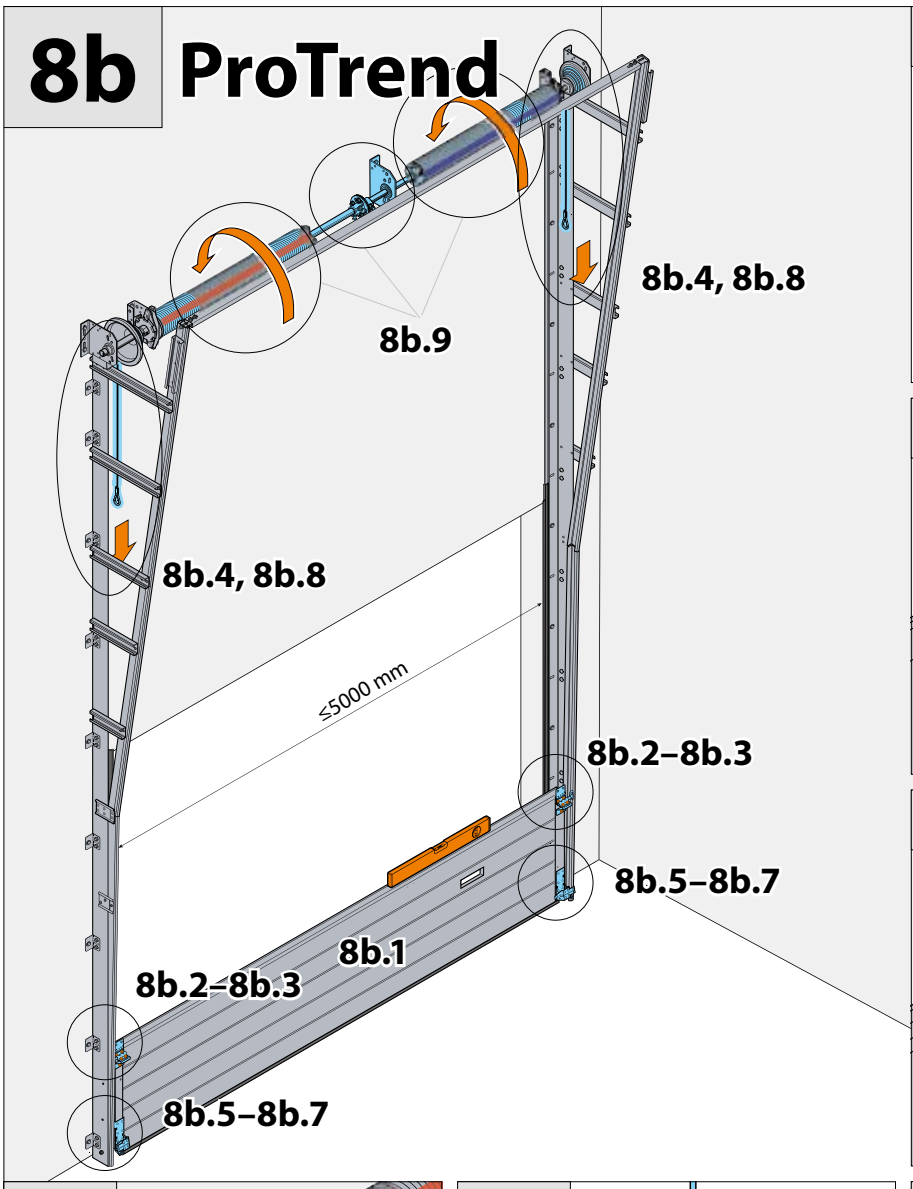

8b.1

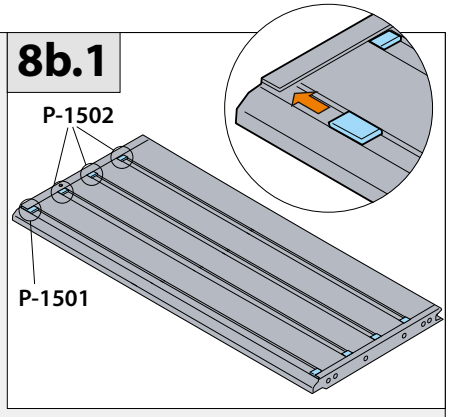

8b.2

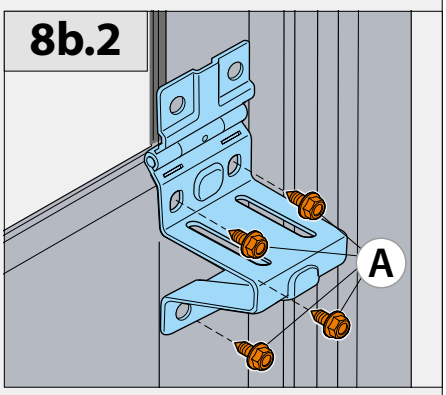

8b.3

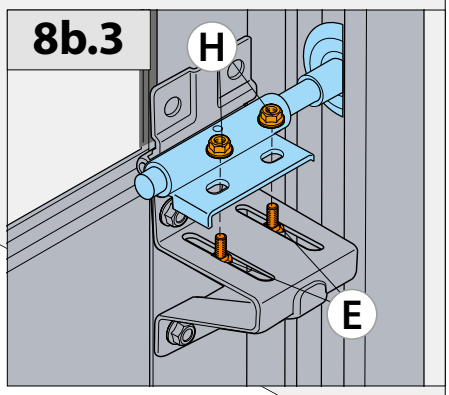

8b.4

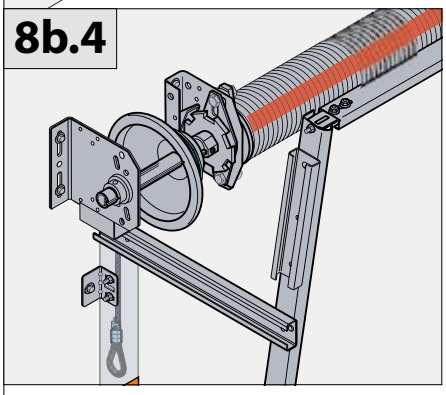

8b.5

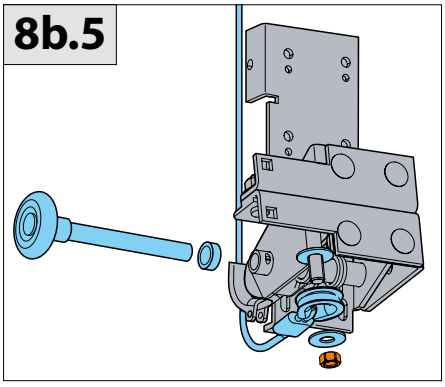

8b.6

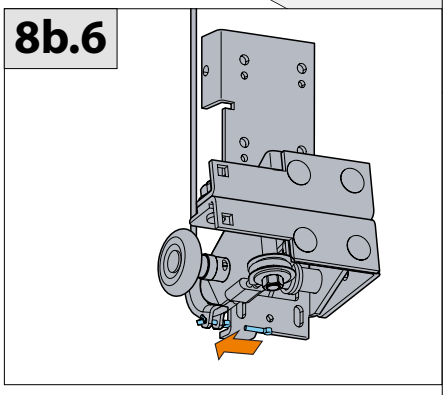

8b.7

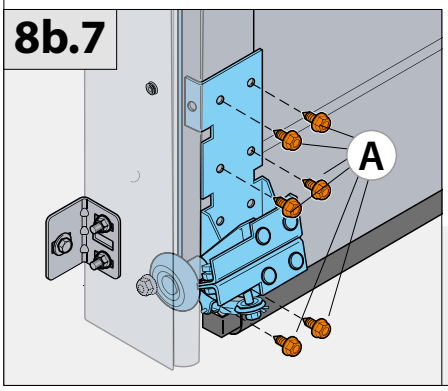

8b.8

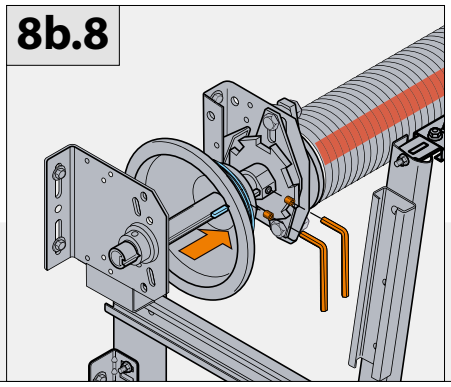

8b.9

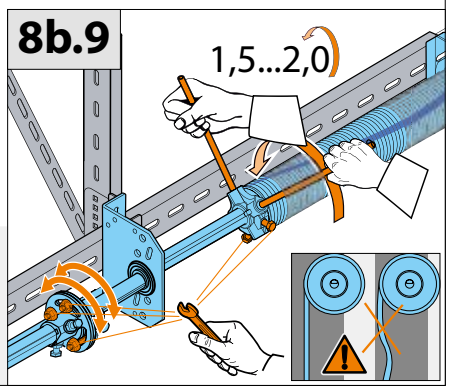

8c ProTrend ProPlus

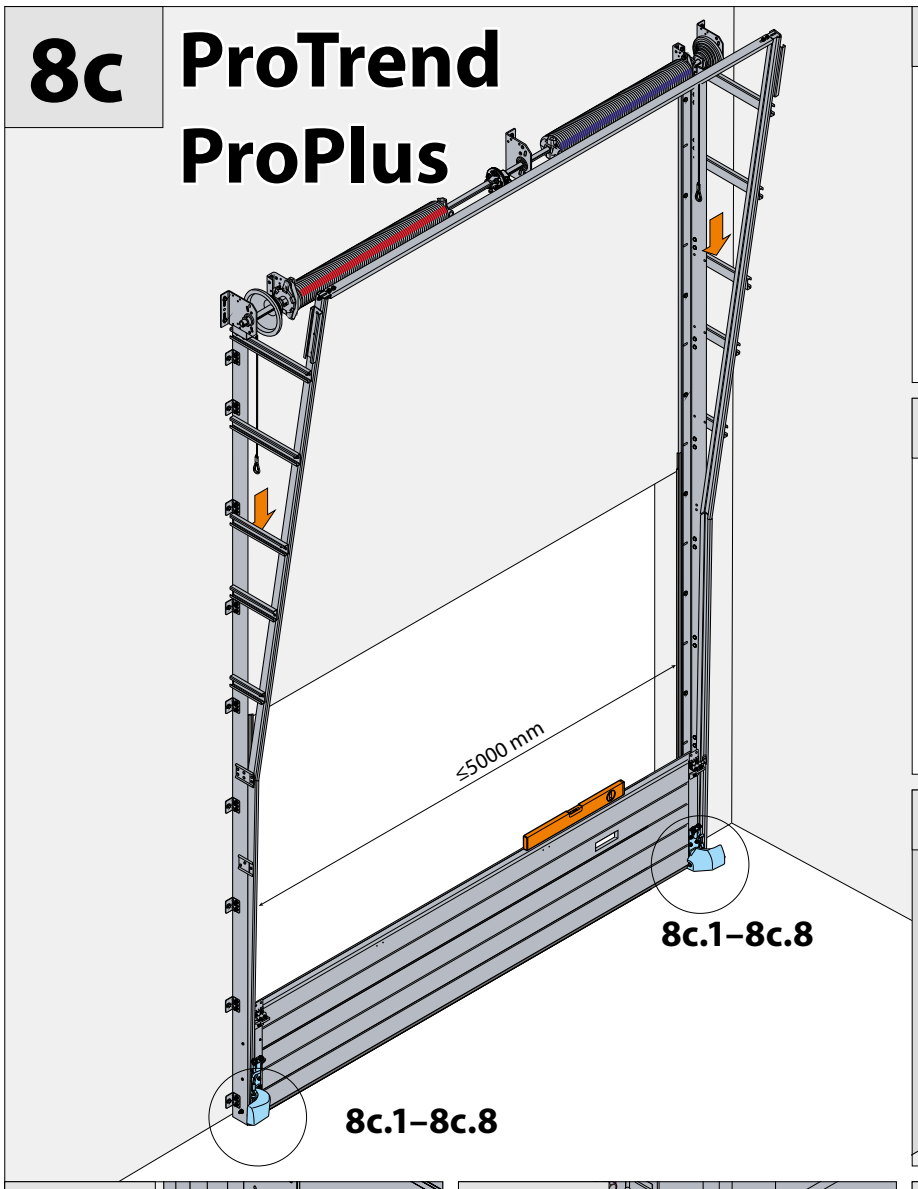

8c.1

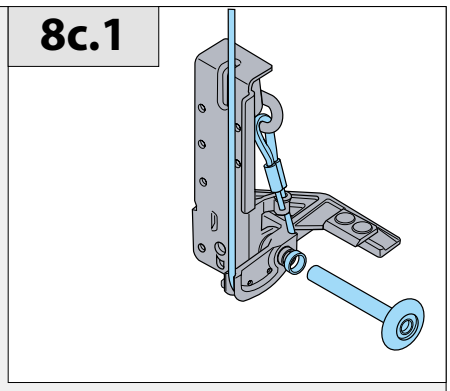

8c.2

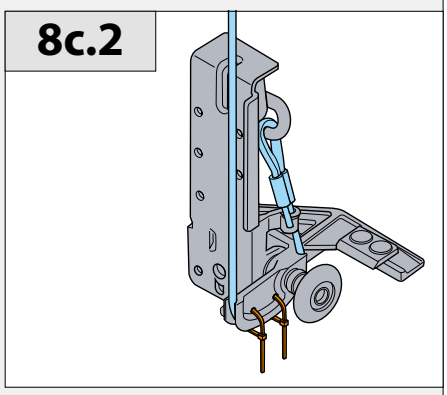

8c.3

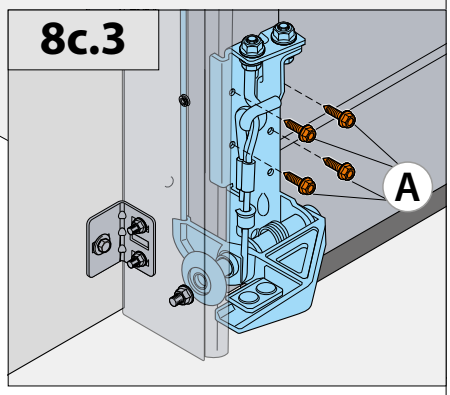

8c.4

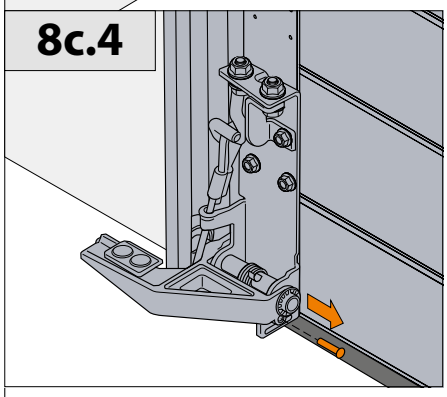

8c.5

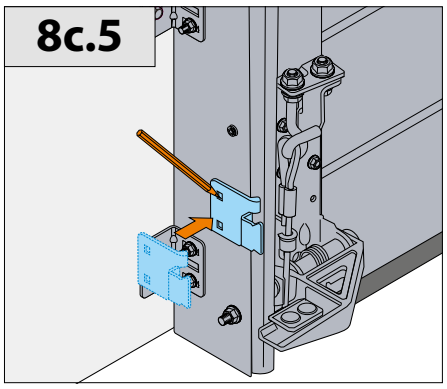

8c.6

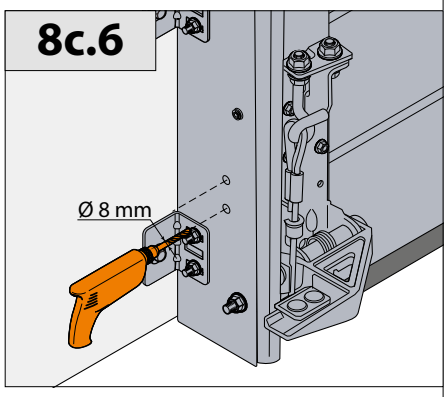

8c.7

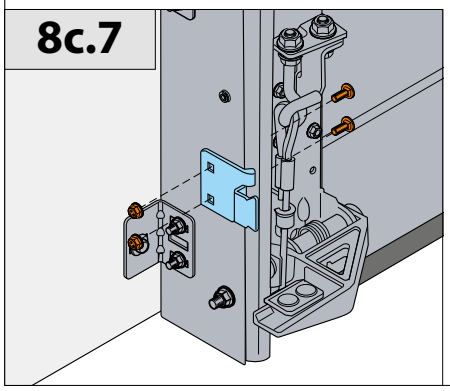

8c.8

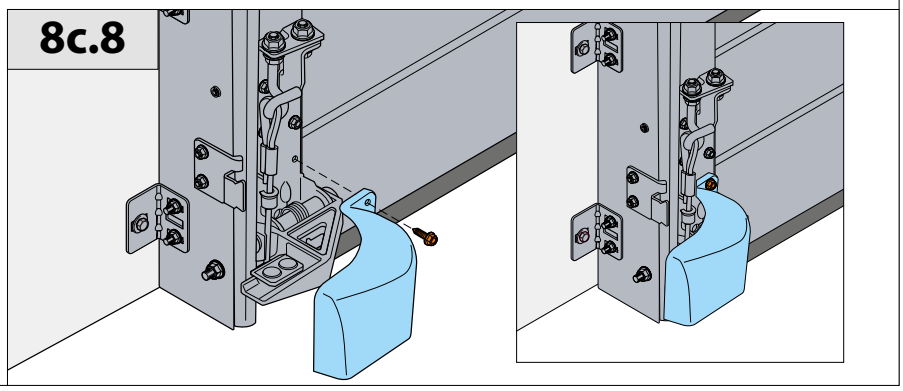

8d ProPlus

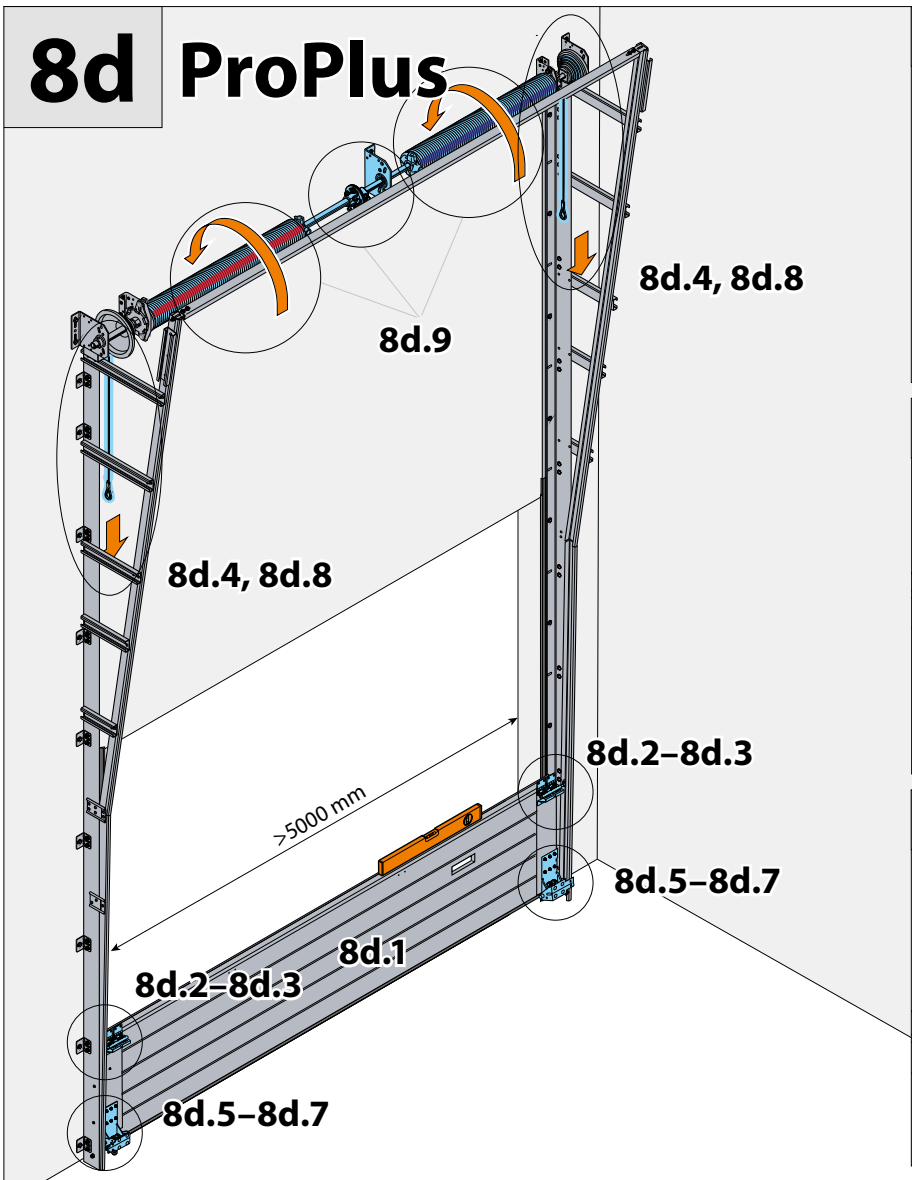

8d.1

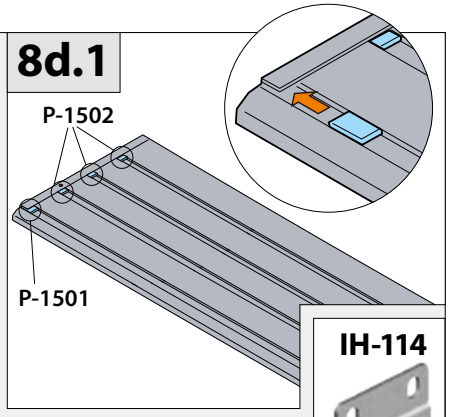

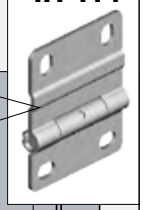

8d.2

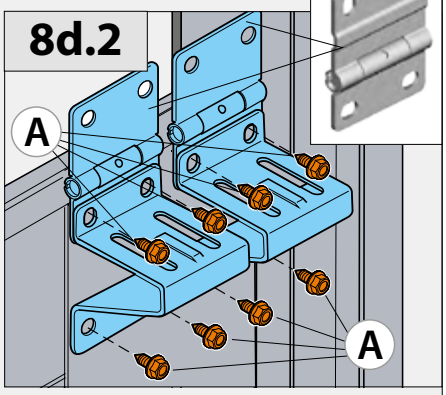

8d.3

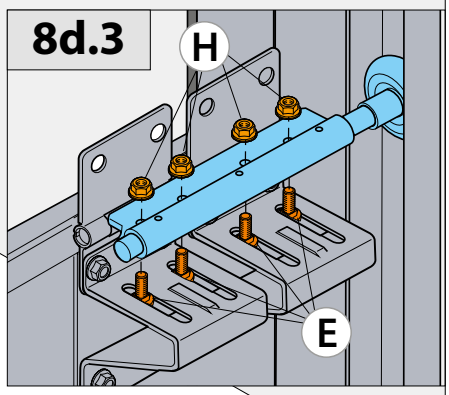

8d.4

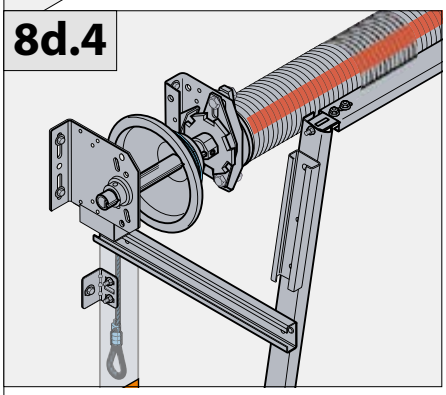

8d.5

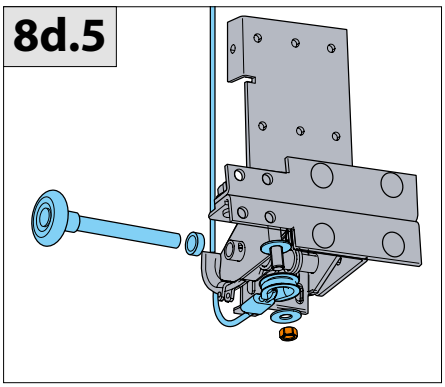

8d.6

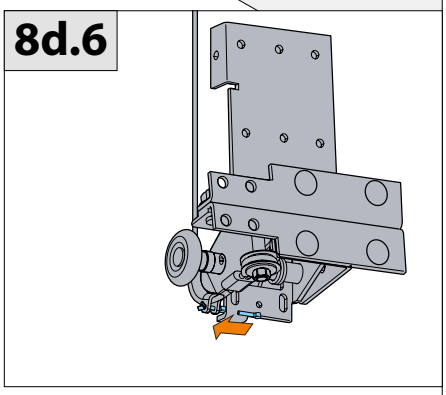

8d.7

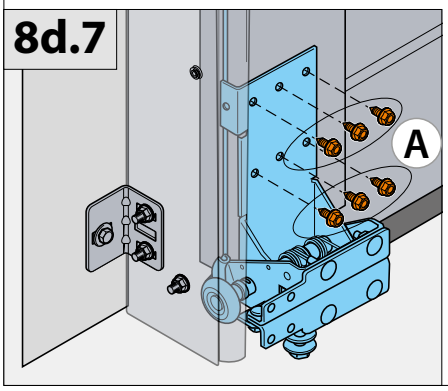

8d.8

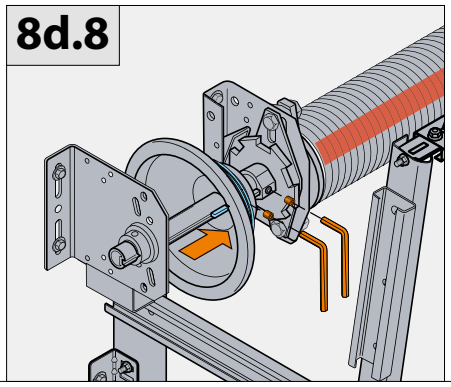

8d.9

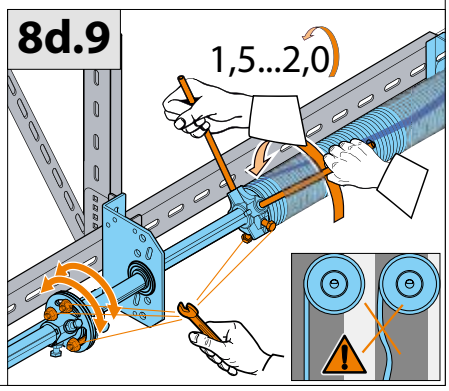

8e ProTrend

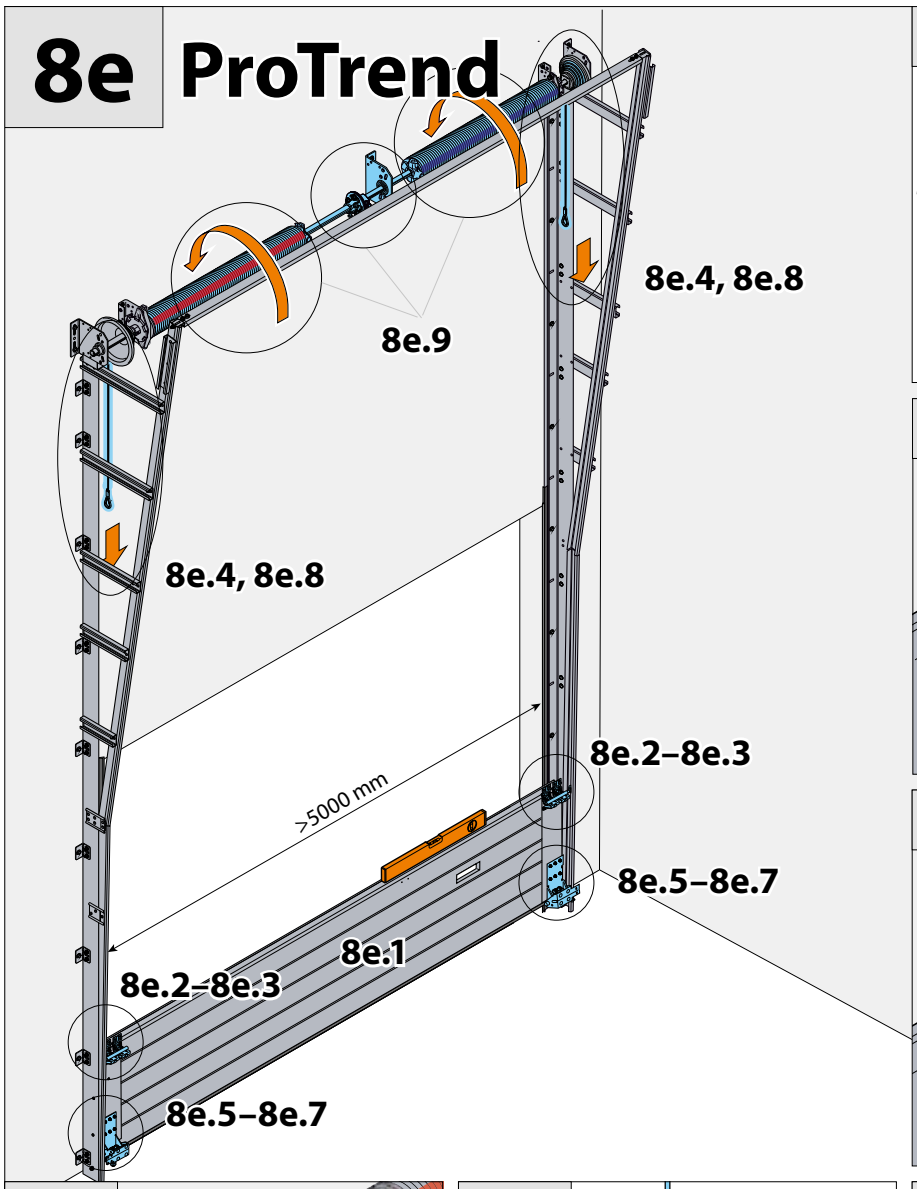

8e.1

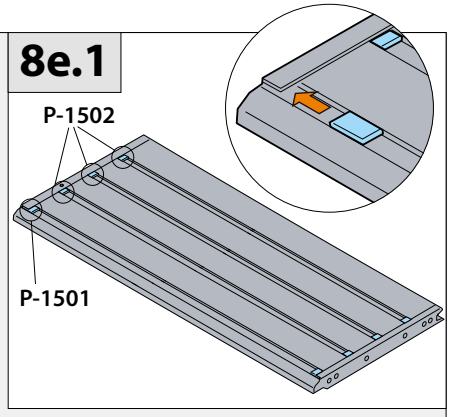

8e.2

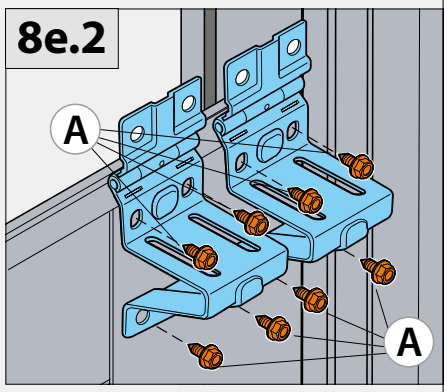

8e.3

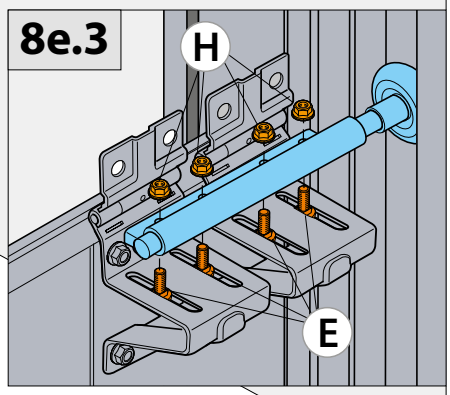

8e.4

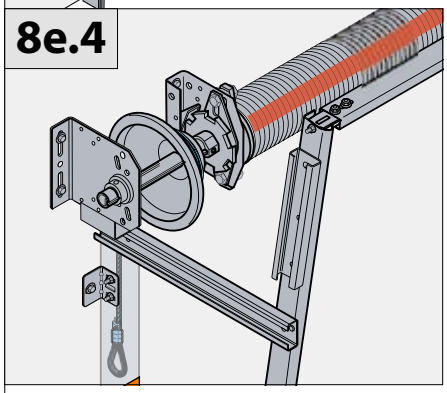

8e.5

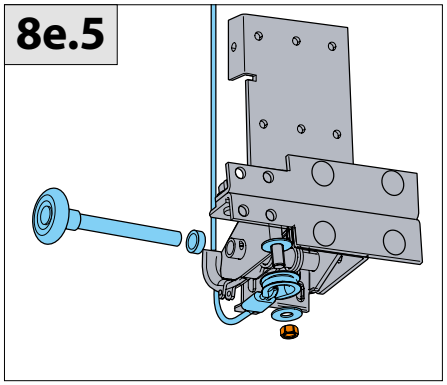

8e.6

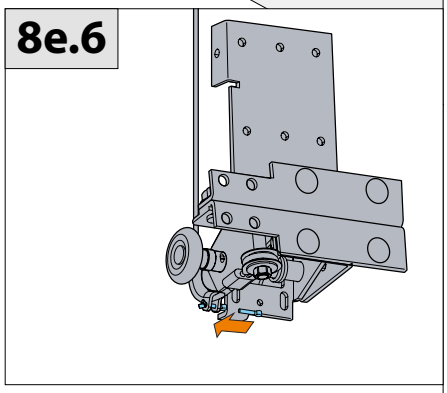

8e.7

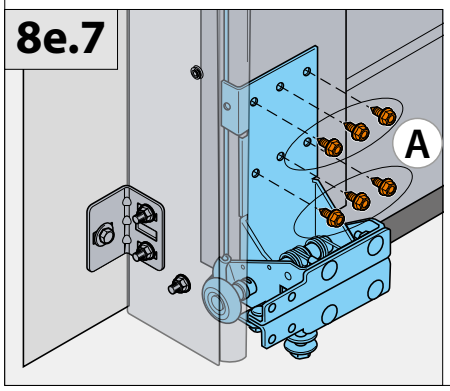

8e.8

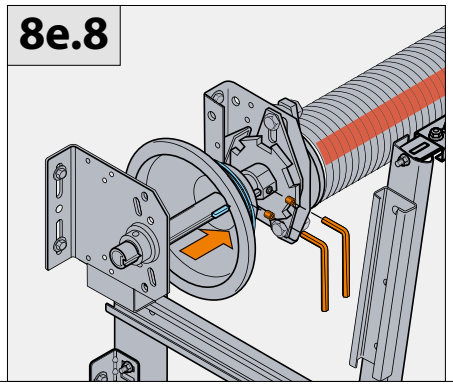

8e.9

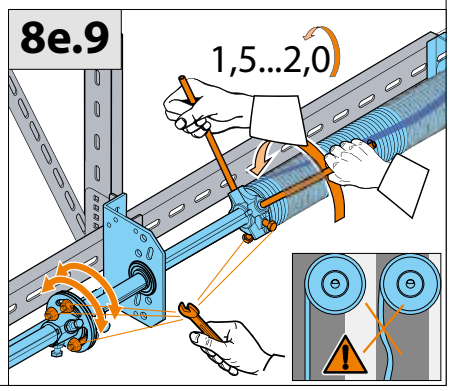

9a ProPlus

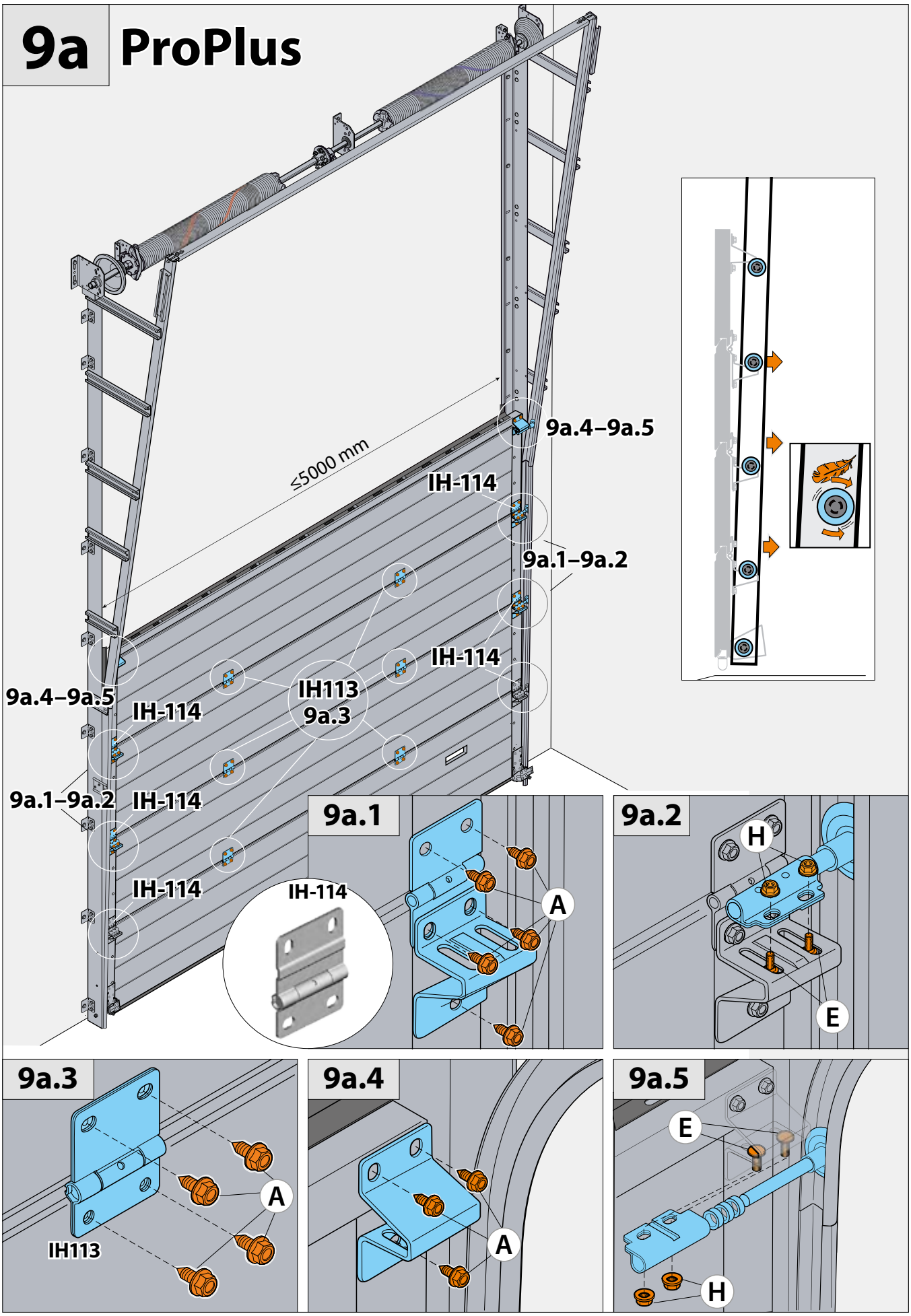
≤5000 mm
9a.4–9a.5
IH-114
9a.1–9a.2
IH-114
IH113
9a.3
9a.4–9a.5
IH-114
9a.1–9a.2
IH-114
IH-114
IH-114
9a.1
A
9a.2
H
E
9a.3
A
IH113
9a.4
A
9a.5
E
H

9b ProTrend

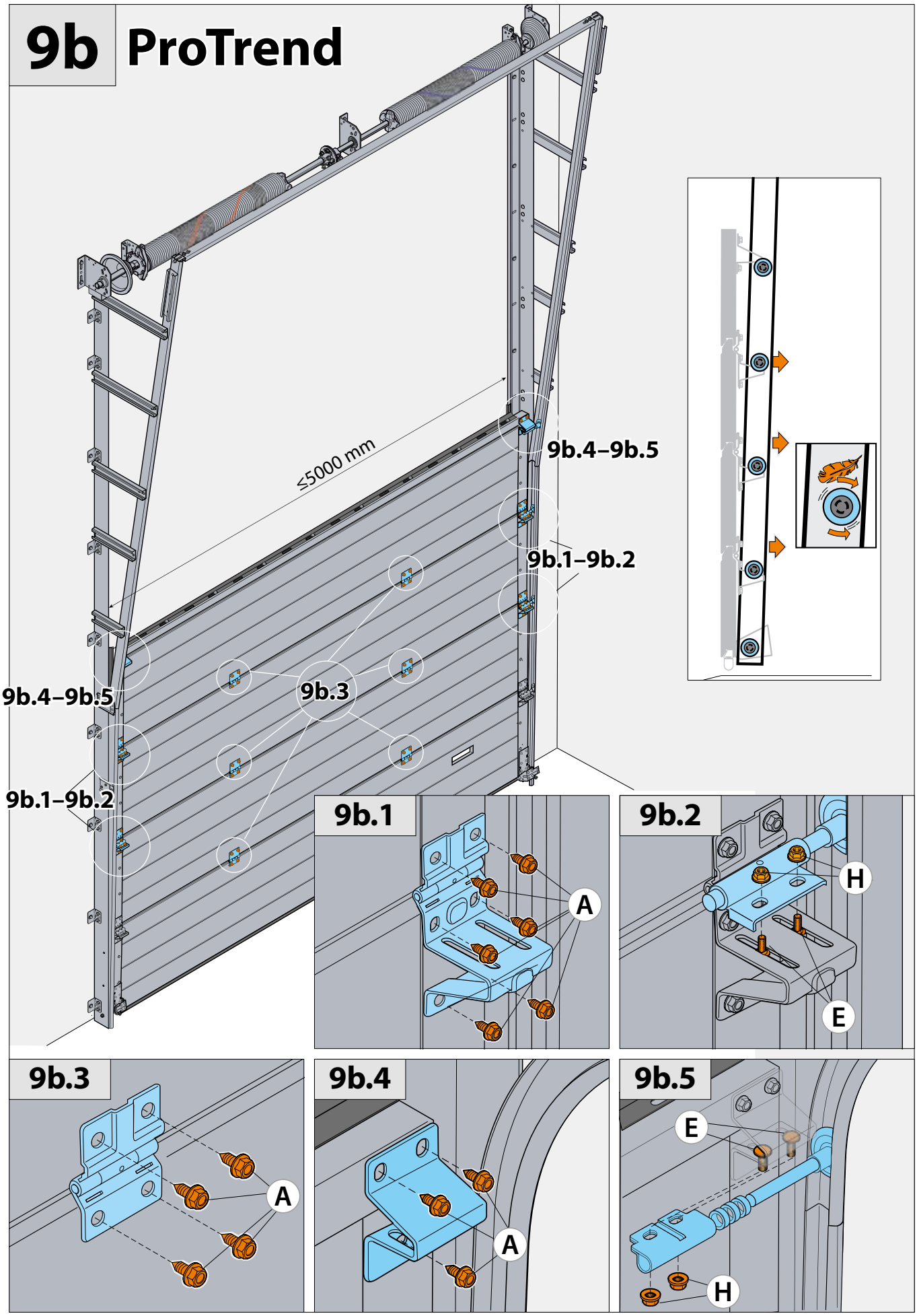
≤5000 mm
9b.4–9b.5
9b.1–9b.2
9b.3
9b.4–9b.5
9b.1–9b.2
9b.1
A
9b.2
H
E
9b.3
A
9b.4
A
9b.5
E
H

9c ProPlus

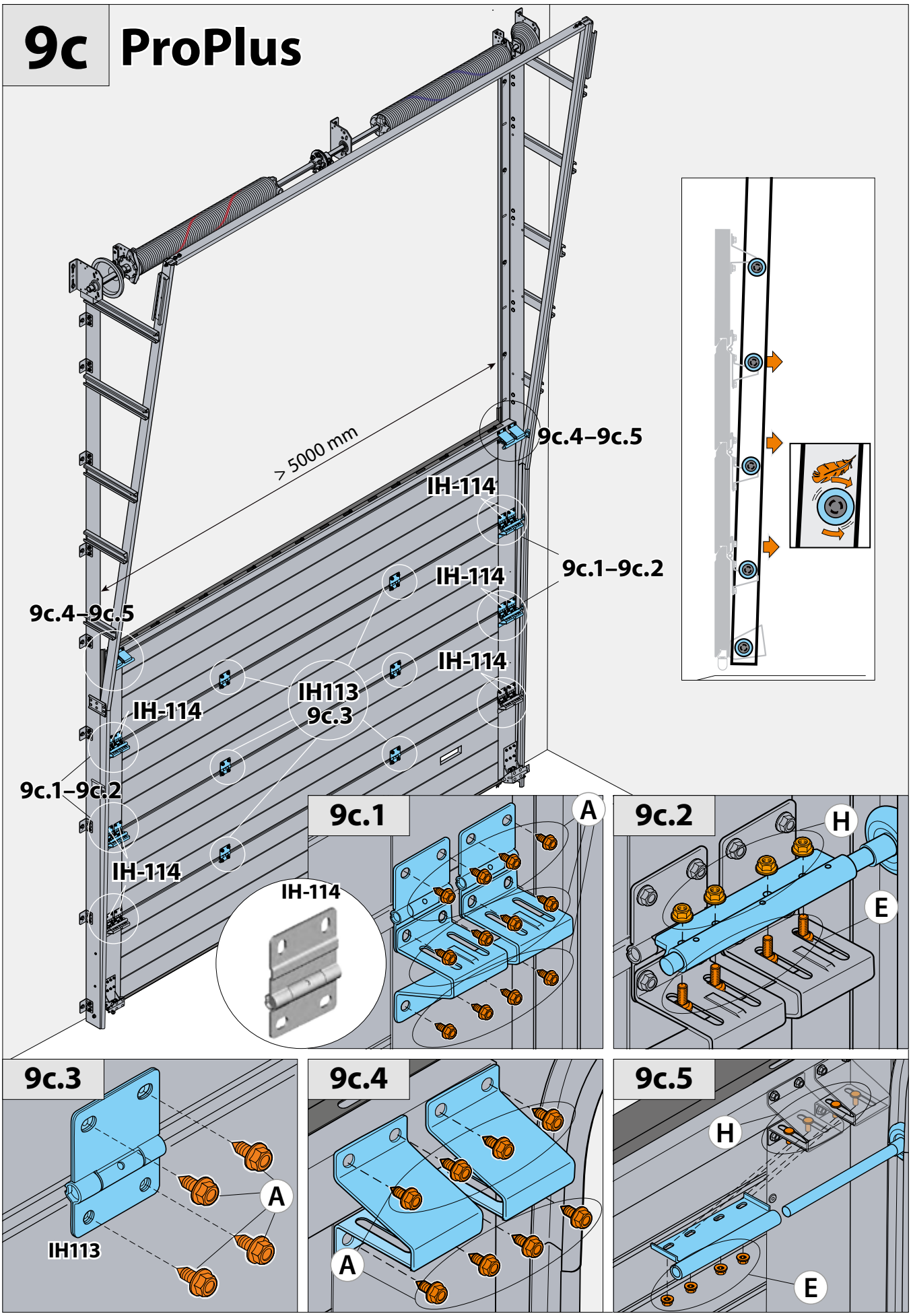
> 5000 mm
9c.4–9c.5
IH-114
9c.1–9c.2
IH-114
9c.4–9c.5
IH-114
IH113
9c.3
IH-114
9c.1–9c.2
IH-114
IH-114
9c.1
A
9c.2
H
E
9c.3
A
IH113
9c.4
A
9c.5
H
E

9d ProTrend

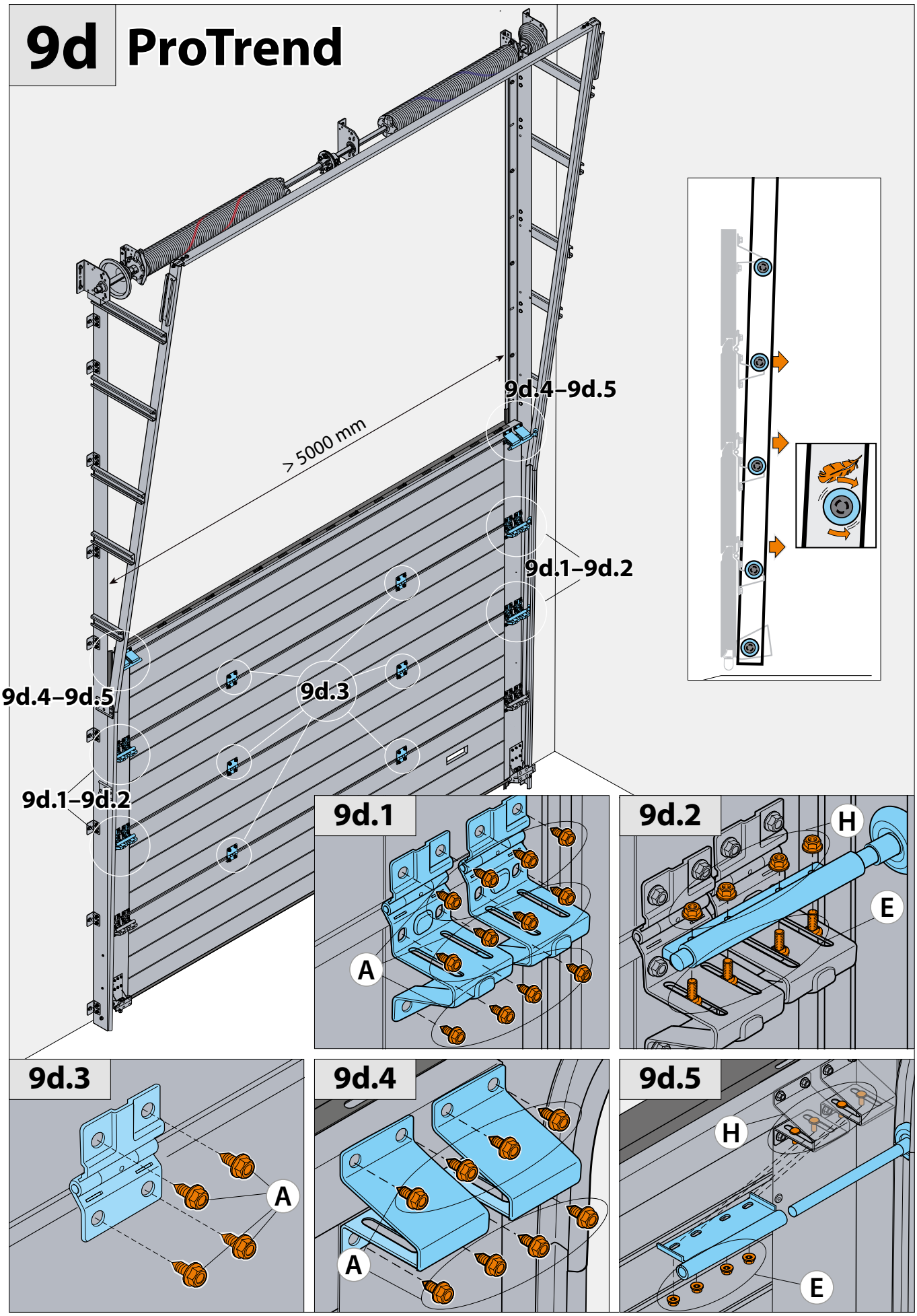
> 5000 mm
9d.4–9d.5
9d.1–9d.2
9d.3
9d.4–9d.5
9d.1–9d.2
9d.1
A
9d.2
H
E
9d.3
A
9d.4
A
9d.5
H
E

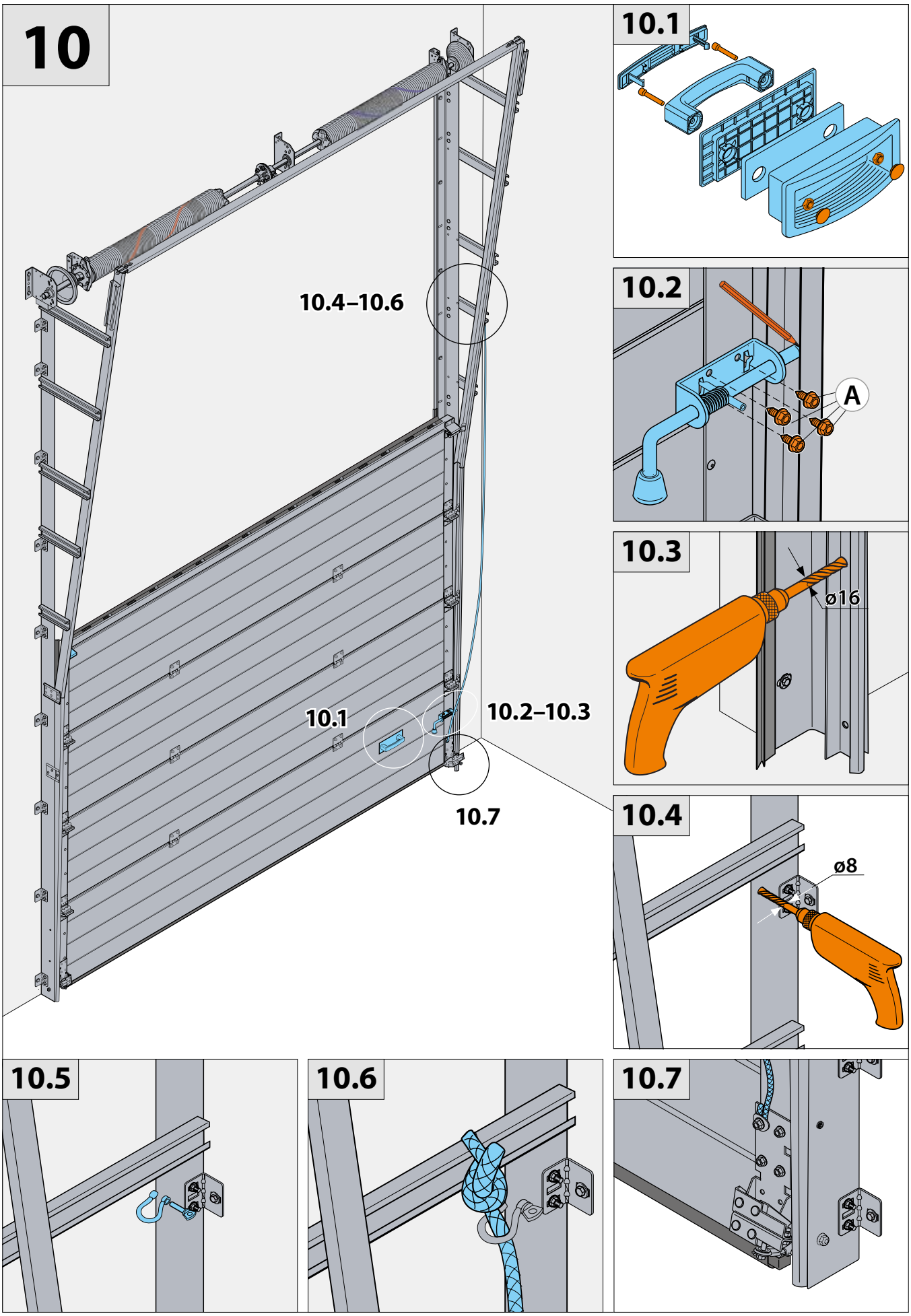
10
10.4–10.6
10.1
10.2–10.3
10.7
10.1
10.2
A
10.3
ø16
10.4
ø8
10.5
10.6
10.7

11

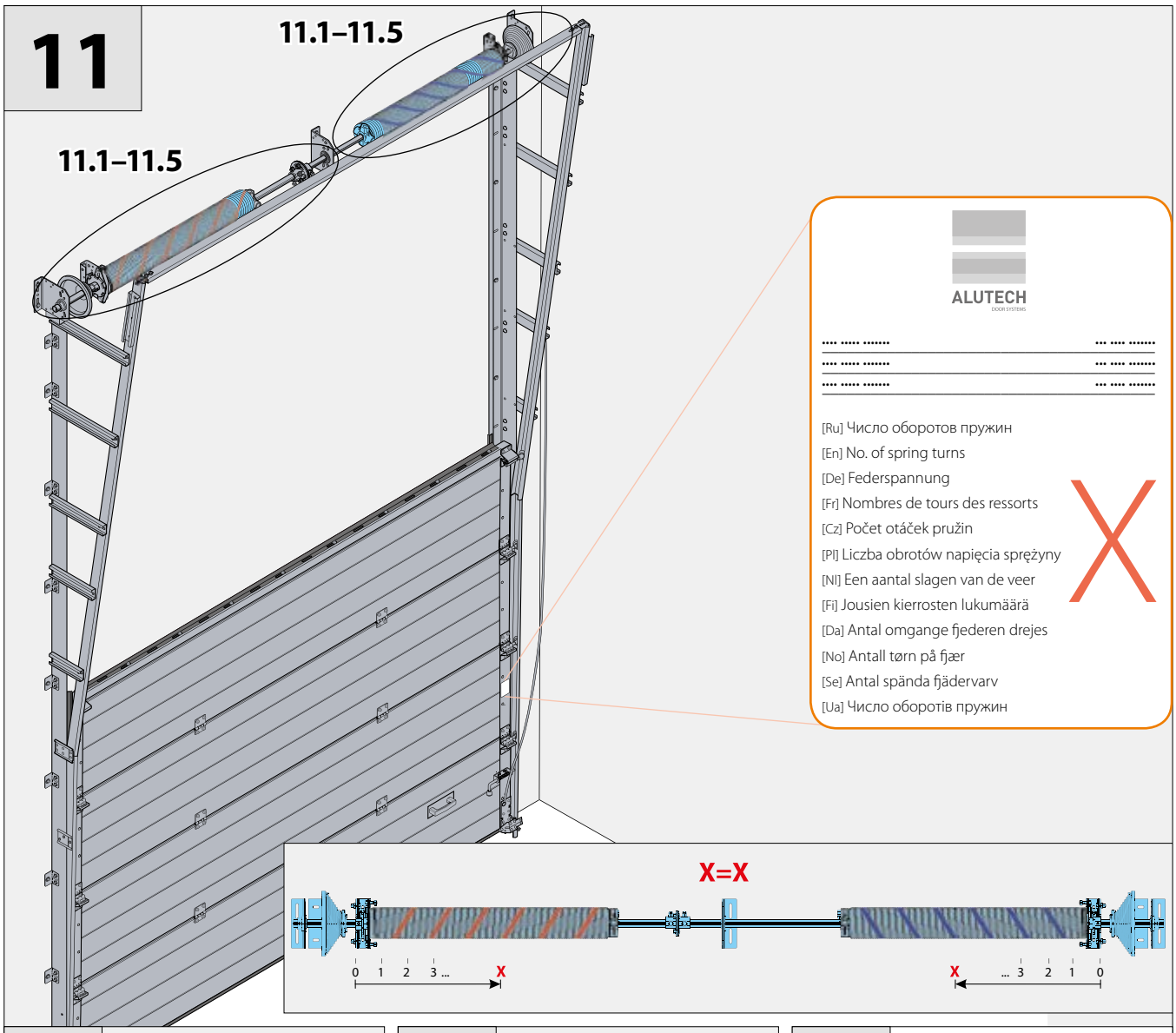

11.1

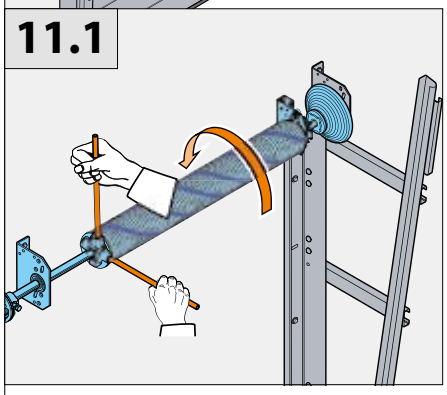

11.2

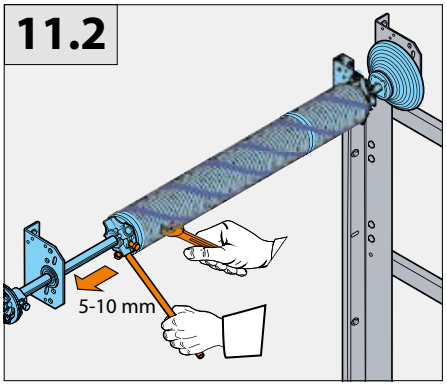

11.3

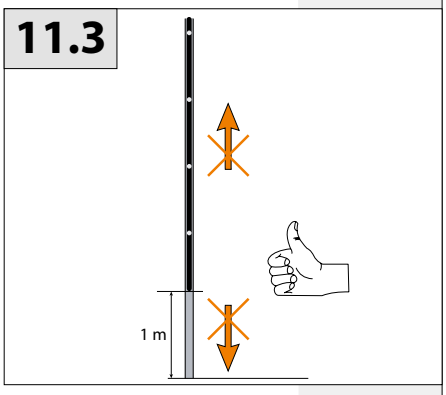

11.4

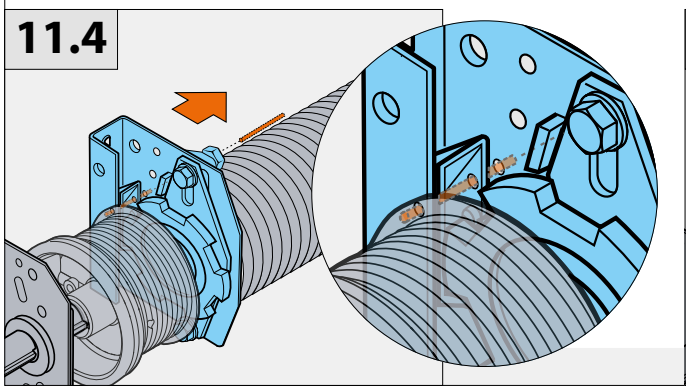

11.5

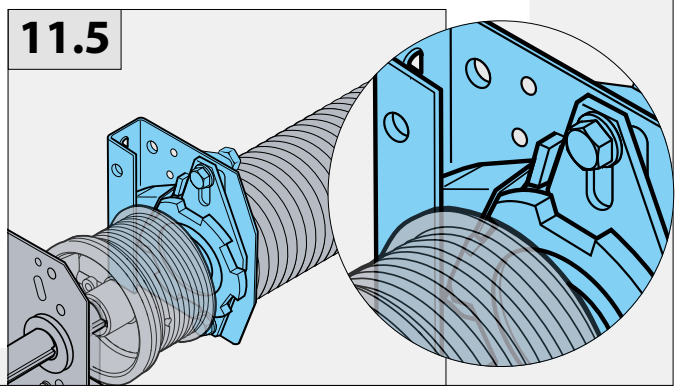

12

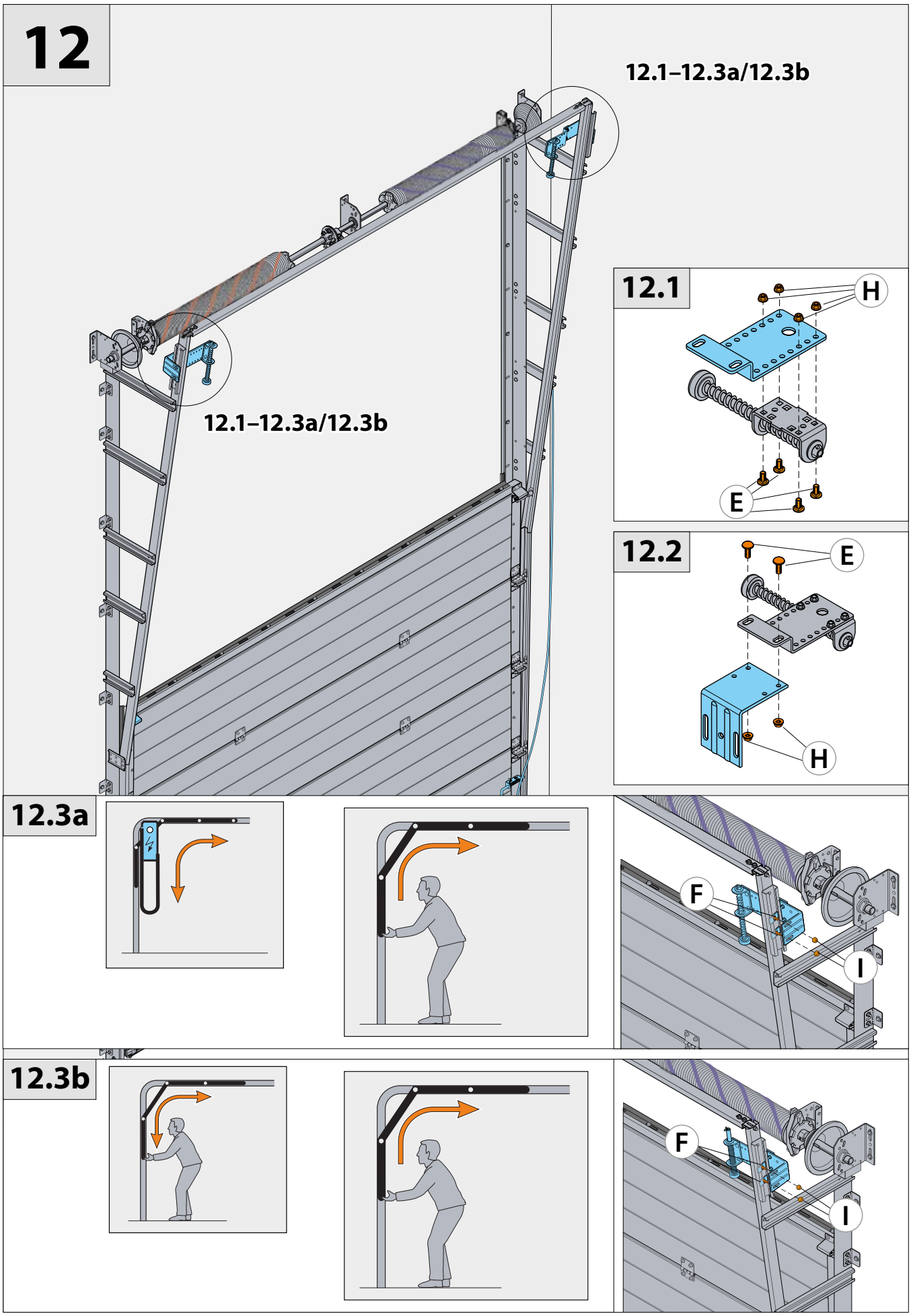

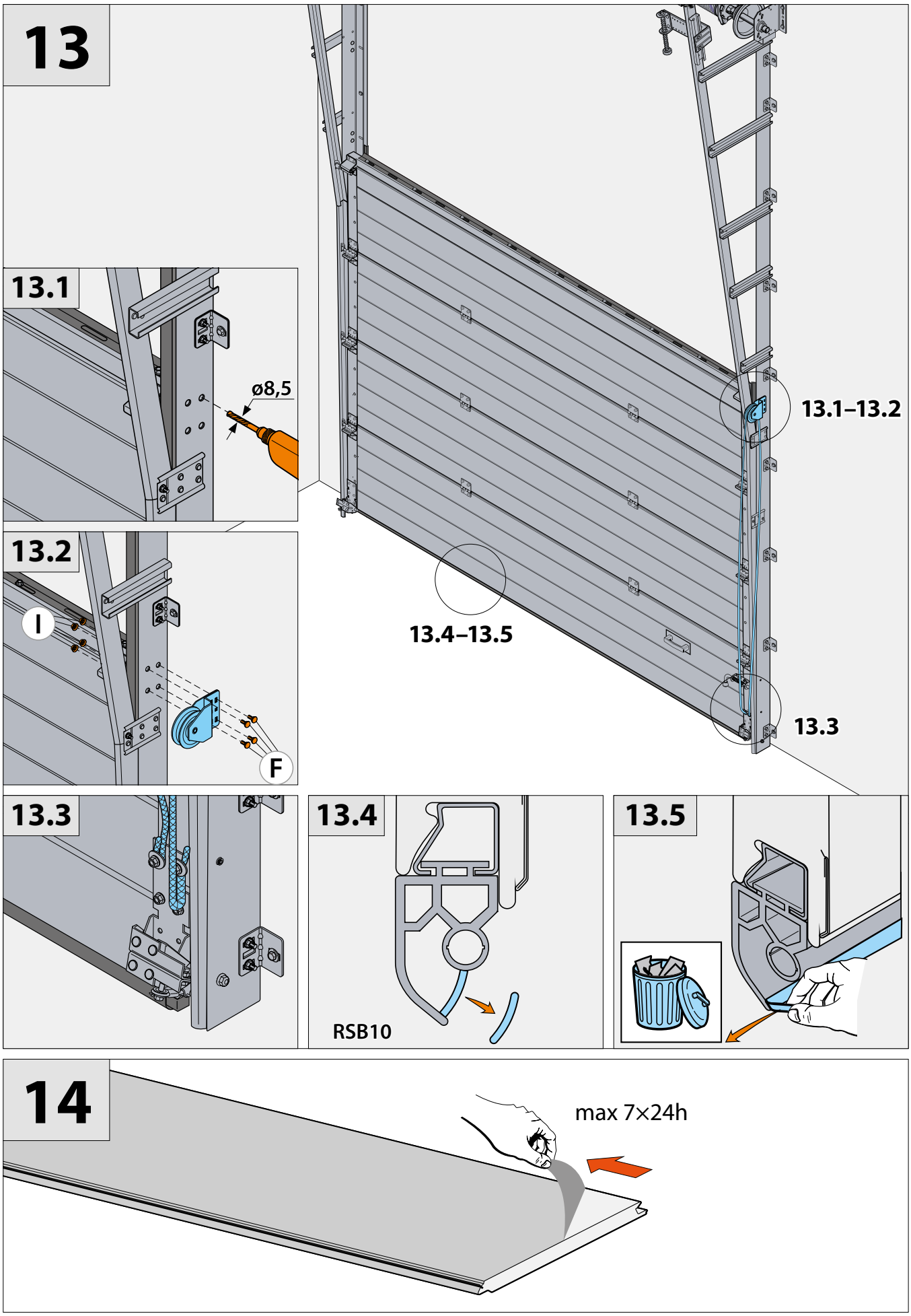
13
13.1
ø8,5
13.2
I
F
13.1–13.2
13.4–13.5
13.3
13.3
13.4
RSB10
13.5
14
max 7×24h
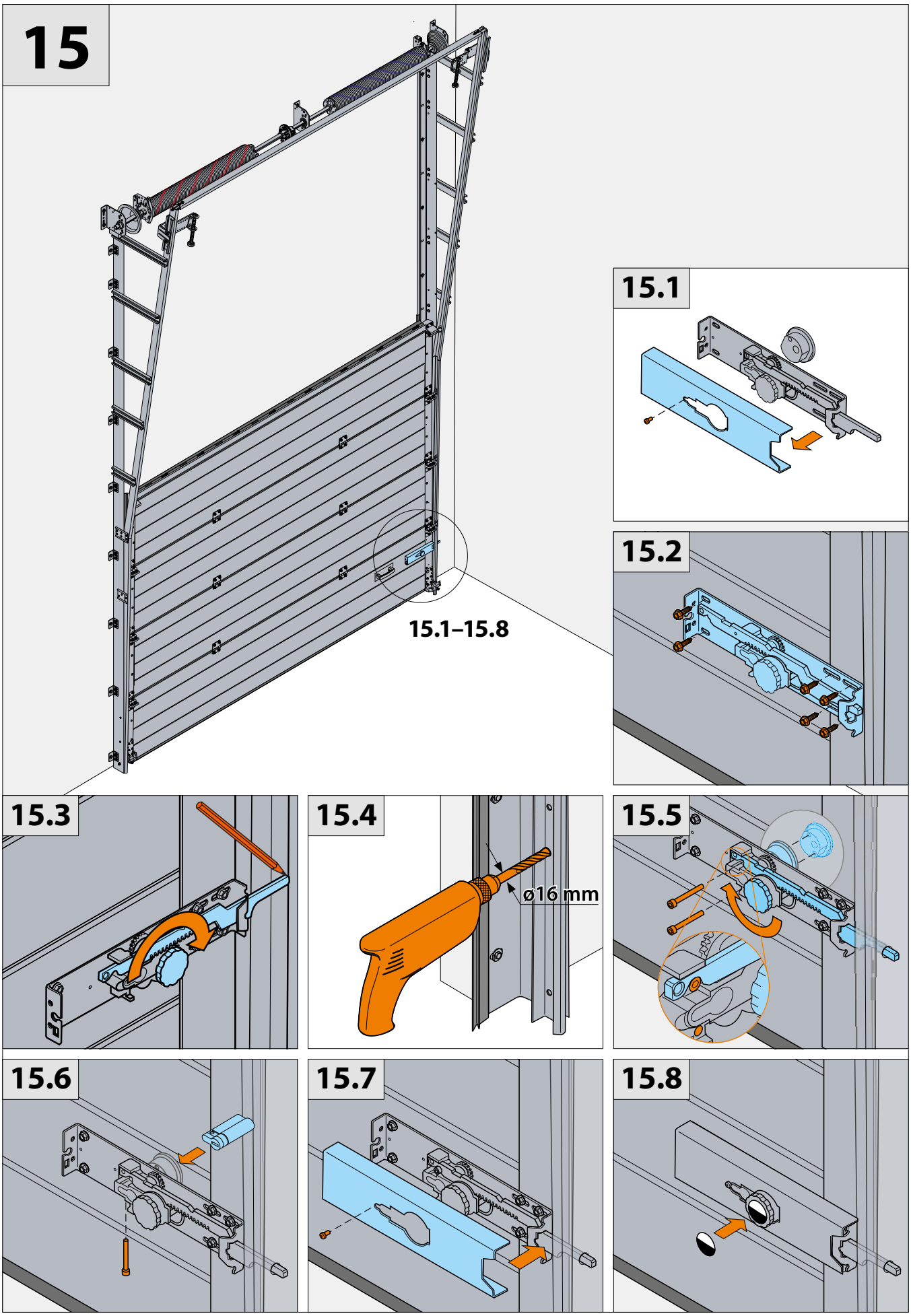
15